MINISTERIO
DE INDUSTRIA, COMERCIO Y
TURISMO

DIRECCIÓN GENERAL DE INDUSTRIA Y
DE LA PEQUEÑA Y MEDIANA EMPRESA

SUBDIRECCIÓN GENERAL DE
CALIDAD Y SEGURIDAD INDUSTRIAL

E9-90R-02A1478/5438

Relativa a / *Concerning* (1)*:*

-homologación de tipo / *APPROVAL GRANTED* (1)
~~-extensión de homologación de tipo / *APPROVAL EXTENDED* (1)~~
~~-denegación de homologación de tipo / *APPROVAL REFUSED* (1)~~
~~-retirada de homologación de tipo / *APPROVAL WITHDRAWN* (1)~~
~~*-producción definitivamente abandonada / production definitively discontinued*(1)~~

de un conjunto de pastillas de freno de disco o de forros de freno de tambor para recambios en aplicación del Reglamento número 90 / *of a replacement brake lining assembly or replacement drum brake lining pursuant to Regulation No.90*

Número de homologación de tipo / *Approval number*: **E9-90R-02A1478/5438**
Número de extensión / *Extension No.* : **00**

1.	Nombre y dirección del solicitante / *Applicant´s name and address*	: FRENOTECNICA SRL V.LE CAPRONI, 15 38068 ROVERETO TN ITALY
2.	Nombre y dirección del fabricante / *Manufacturer´s name and address*	: FRENOTECNICA SRL V.LE CAPRONI, 15 38068 ROVERETO TN ITALY
3.	Marca y tipo del conjunto de forro de freno /~~de los forros de freno de tambor~~ de repuesto(1) (Conjunto del freno representativo del tipo) *Make and type of brake lining assembly/~~drum brake linning~~(1) (Brake lining assembly representative of the type)* Denominación(es) comercial(es) (Otros conjuntos de freno incluidos en el tipo) / *Commercial description(s) (Other brake lining assemblies covered by the type)*	: **3059** : **Ver documentación técnica punto 1.1. /** ***See technical documentation point 1.1.***
4.	Marca y tipo de forros de freno / *Make and type of brake lining* Denominación(es) comercial(es) / *Commercial description(s)*	: **ME100** : **-----**
5.	Vehículo / ejes / frenos en los que se puede instalar el tipo de juego de forros de freno / ~~tipo de forros de freno de tambor~~ como tipo de juego de forros de freno de orígen / ~~forros de freno de tambor de orígen~~ (1) / *Vehicles/ axles / brakes for which the brake lining assembly type / ~~drum brake lining type~~ qualifies as original brake lining assembly/ ~~original drum brake lining~~*(1):	: N.P. / N.A.

(1) Táchese lo que no proceda / *Strike out what does not apply*

Firmado el 13/08/2020 08:39:22 : JOSE MANUEL PRIETO BARRIO, Subdirector / Subdirectora General de S.G. de Calidad y Seguridad Industrial.

Código: **9352869-82054100IOKCXWP8Y24F** Autenticidad verificable en: https://serviciosmin.gob.es/arce
Documento electrónico, página 1 de 2.

E9-90R-02A1478/5438

6. Vehículo / ejes / frenos / en los que se puede instalar el tipo de juego de forros de freno / ~~tipo de forros de freno de tambor~~ como tipo de juego de forros de freno de reposición / ~~forros de freno de tambor de reposición~~ (1) / *Vehicles / axles / brakes for which the brake lining assembly type/ ~~drum brake lining type~~ qualifies as replacement brake lining assembly/ ~~replacement drum brake lining~~*(1): : Ver documentación del fabricante. / *See manufacturer's information document*

6.1. Además en el caso de sistemas de frenado combinados como se indica en el párrafo 2.9 del reglamento nº 78, la(s) combinación(es) de forros de freno homologados / *Additionally in the case of combined braking systems in the meaning of paragraph 2.9. of Regulation No. 78, approved brake lining assembly combination(s)*: : N.P. / N.A.

7. Presentado a homologación el / *Submitted for approval on* : 27/07/2020

8. Servicio técnico encargado de los ensayos de homologación / *Technical service responsible for approval tests* : IDIADA

8.1. Fecha del informe de ensayo emitido por este servicio / *Date of the report issued by that service* : 27/07/2020

8.2. Número de informe de ensayo emitido por este servicio / *Number of the report issued by that service* : **CV20021440**

9. La homologación es concedida, ~~denegada, extendida, retirada~~ (1) / *Approval granted, ~~refused, extended, withdrawn~~(1).*

10. Lugar /*Place*: Madrid

11. Fecha /*Date*: Ver firma electrónica / *See electronic signature*

12. Firma /*Signature :* EL SUBDIRECTOR GENERAL DE CALIDAD Y SEGURIDAD INDUSTRIAL
Resolución P.D. del DIRECTOR GENERAL DE INDUSTRIA Y DE LA PYME de 25-10-2012

13. Se adjunta el índice del expediente de homologación en posesión de las autoridades competentes, en el cual puede obtenerse a petición del interesado */ Annexed to this communication is a list of documents in the approval file deposited at the administrative services having delivered the approval and which can be obtained upon request:*
    - Informe de ensayos / *Test report*
    - Documentación técnica aportada por el fabricante / *Manufacturer's technical Documentation.*

Número de control/*Control number:* 31952

(1) Táchese lo que no proceda / *Strike out what does not apply*

Firmado el 13/08/2020 08:39:22 : JOSE MANUEL PRIETO BARRIO, Subdirector / Subdirectora General de S.G. de Calidad y Seguridad Industrial.

Código: **9352869-82054100IOKCXWP8Y24F** Autenticidad verificable en: https://serviciosmin.gob.es/arce
Documento electrónico, página 2 de 2.

L'Albornar - Apartado de Correos 20
E - 43710 Santa Oliva (Tarragona)
España

Tel. +34 977 166000
Fax +34 977 166007
e-mail: idiada@idiada.com

INFORME Nº / REPORT No CV20021440

HOMOLOGACIÓN DE CONJUNTOS DE FORROS DE FRENO DE REPOSICIÓN
REGLAMENTO UN Nº 90.02
TYPE-APPROVAL OF REPLACEMENT BRAKE LINING ASSEMBLIES
UN REGULATION No.90.02

Nombre y dirección del solicitante / *Applicant's name and address*	: FRENOTECNICA SRL V.LE CAPRONI, 15 38068 ROVERETO TN ITALY
Nombre y dirección del fabricante / *Manufacturer's name and address*	: FRENOTECNICA SRL V.LE CAPRONI, 15 38068 ROVERETO TN ITALY
Marca y tipo del conjunto de forro de freno (Conjunto del freno representativo del tipo) / *Make and type of brake lining assembly (Brake lining assembly representative of the type)*	: 3059
Denominación(es)comercial(es) (Otros conjuntos de freno incluidos en el tipo) / *Commercial description(s)(Other brake lining assemblies covered by the type)*	: Ver documentación técnica punto 1.1. / *See technical documentation point 1.1.*
Marca y tipo de forros de freno / *Make and type of brake lining*	: ME100
Denominación(es)comercial(es) / *Commercial description(s)*	: -----
Lugar y fecha de emisión / *Place and date of issue*	: L'Albornar, Santa Oliva (Tarragona) SPAIN, 27/07/2020

CONCLUSIONES: El juego de forros de freno de reposición ensayado CUMPLE los requisitos exigidos por el Reglamento UN Nº 90.02. Las características se detallan en la documentación técnica aportada. /*CONCLUSIONS: The replacement brake lining assembly tested FULFILS the technical requirements of UN Regulation No. 90.02. The characteristics are detailed in the attached technical documentation*

Realizado / *Performed by*

David Laballós Núñez
INGENIERO DE HOMOLOGACIONES
HOMOLOGATION ENGINEER

V. Bº. / *Revised by:*

Ignacio Lafuente Buil
JEFE DE DEPARTAMENTO
DEPARTMENT MANAGER

* LOS RESULTADOS PRESENTADOS SE REFIEREN UNICAMENTE A LA MUESTRA ENSAYADA.
THE PRESENTED RESULTS REFER ONLY TO THE TESTED SAMPLE
* QUEDA TERMINANTEMENTE PROHIBIDA LA REPRODUCCION PARCIAL DE ESTE INFORME SIN PERMISO EXPRESO DE IDIADA.
THE PARTIAL REPRODUCTION OF THIS REPORT WITHOUT THE PERMISSION OF IDIADA IS COMPLETELY FORBIDDEN

Validate this report with the security code «UJ4MUK0S» at: https://extranet.idiada.com/hom-cve
Verifique el informe con código de seguridad «UJ4MUK0S» en: https://extranet.idiada.com/hom-cve
CV20021440

Relativa a la homologación de los juegos de forros de freno de repuesto según el Reglamento UN Nº 90.02 /

According to UN Regulation 90.02 With regard to Type-Approval of Brake Lining Assemblies

0. GENERALIDADES / *GENERAL*

0.1. Marca / *Make (trade name of the manufacturer)* :
BRENTA

0.2. Tipo (Conjunto del freno representativo del tipo) / *Type (Brake lining assembly representative of the type)* :
3059

0.3. Nombre y dirección del fabricante / *Name and address of the manufacturer* :
FRENOTECNICA SRL
V.LE CAPRONI, 15
38068 ROVERETO TN
ITALY

0.4. Nombre y dirección de solicitante / *Name and address of the applicant* :
FRENOTECNICA SRL
V.LE CAPRONI, 15
38068 ROVERETO TN
ITALY

0.5. Emplazamiento y forma de colocación de la marca de homologación UN en componentes y unidades técnicas independientes. Instrucciones de marcado / *In case of components and separate technical units, location and method of affixing the UN approval mark. Marking Instructions* :
Ver anexo nº 3 / *See annexe No. 3*

0.6. Dirección(es) de la planta(s) de montaje / *Address(es) of assembly plant(s)* :
FRENOTECNICA SRL
V.LE CAPRONI, 15
38068 ROVERETO TN
ITALY

IDIADA CV20021440

1. **DESCRIPCION DEL DISPOSITIVO / *DESCRIPTION OF THE DEVICE***

1.1. **Marca y tipo del conjunto de forros de freno(Conjunto del freno representativo del tipo) / *Make and type of brake lining assembly* (Brake lining assembly representative of the type):**
3059

Denominación(es) commercial(es) (Otros conjuntos de freno incluidos en el tipo) / *Commercial description(s) (Other brake lining assemblies covered by the type):*
3019, 3020, 3021, 3022, 3026, 3027, 3030, 3031, 3034, 3035, 3038, 3041, 3043, 3047, 3052, 3053, 3054, 3058, 3061, 3062, 3063, 3064, 3069, 3070, 3071, 3072, 3073, 3077, 3078, 3079, 3080, 3084, 3091, 3092, 3094, 3097, 3098, 3100, 3102, 3103, 3104, 3107, 3112, 3116, 3117, 3123, 3127, 3129, 3131, 3136, 3133, 3137, 3139, 3140, 3141, 3142, 3143, 3145, 3146, 3147, 3148, 3151, 3153, 3154, 3155, 3162, 3167, 3174, 3175, 3176, 3184, 3185, 3186, 3188, 3190, 3196, 3201, 3204

1.2. **Marca y tipo de forro de freno / *Make and type of brake lining* :**
ME100

1.3. **Vehiculo(s) / ejes / frenos en los que se puede instalar el tipo de juego de forros de freno como pieza de origen / *Vehicle(s)/ axle(s)/ brake(s) for which the brake lining assembly qualifies as original brake lining assembly*:**
No procede / *Not applicable*

1.4. **Vehiculo(s) / ejes / frenos en los que se puede instalar el tipo de juego de forros de freno como pieza de repuesto / *Vehicle(s)/ axle(s)/ brake(s) for which the brake lining assembly qualifies as replacement brake lining assembly:***
Ver anexo nº 5 / *See annex No. 5*

1.5. **Dibujos del juego de forros de freno de repuesto que indiquen las dimensiones / *Drawing(s) of the brake lining assembly showing functional dimensions:***
Ver anexo nº 2 / *See annex No. 2*

1.6. **Indicación de las posiciones en el vehiculo/eje/freno que se quiere homologar / *Indication of positions on the vehicle(s)/ axle(s)/ brake(s) for which approval is sought:***
Eje delantero o trasero / *Front or rear axle*

1.7. **Valores de fricción / *Values for the friction behaviour:***
Ver anexo nº 4 / *See annex No. 4*

1.8. **Instrucciones de montaje / *Fitting instructions:***
Ver anexo nº 6 / *See annex No. 6*

1.9. **Empaquetado y marcado / *Packaging and marking:***
Ver anexo nº 7 / *See annex No. 7*

IDIADA CV20021440

Anexo / *Annex* 2: Dibujo / *Drawing*

Tipo / *Type* : 3019

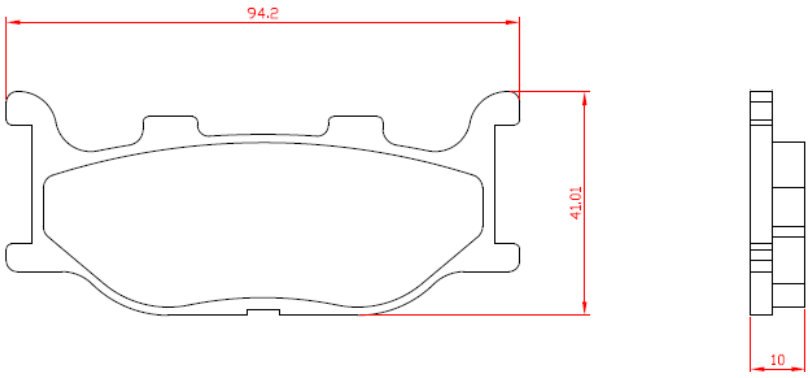

Tipo / *Type* : 3020

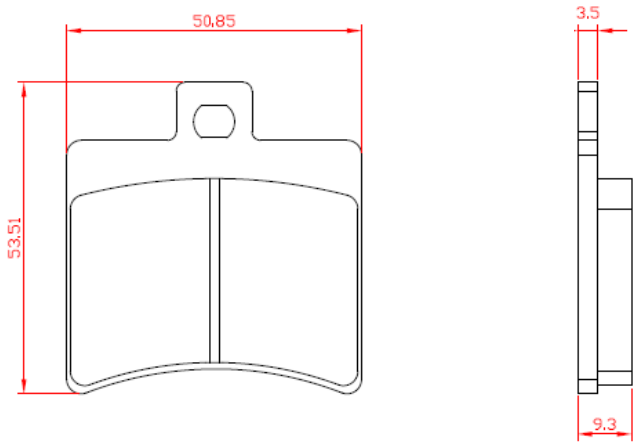

IDIADA CV20021440

Tipo / *Type* : 3021

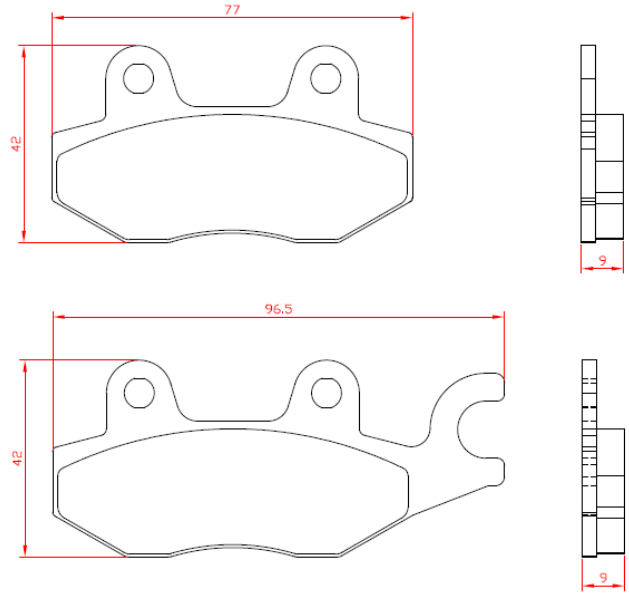

Tipo / *Type* : 3022

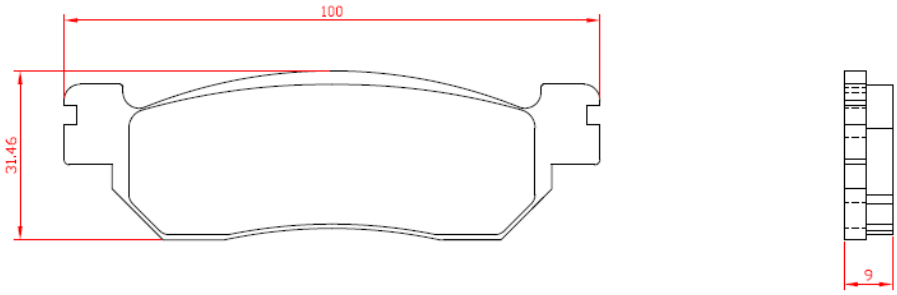

IDIADA CV20021440

Tipo / *Type* : 3026

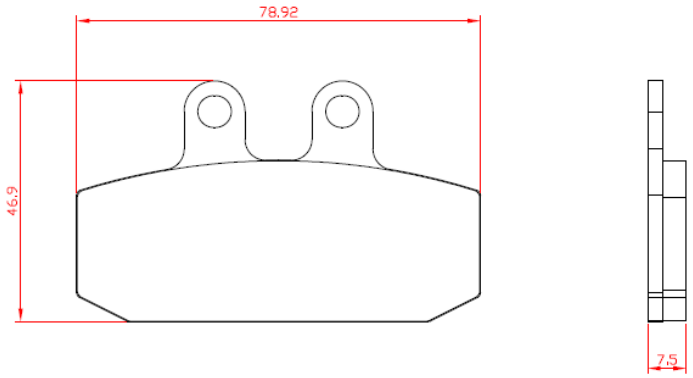

Tipo / *Type* : 3027

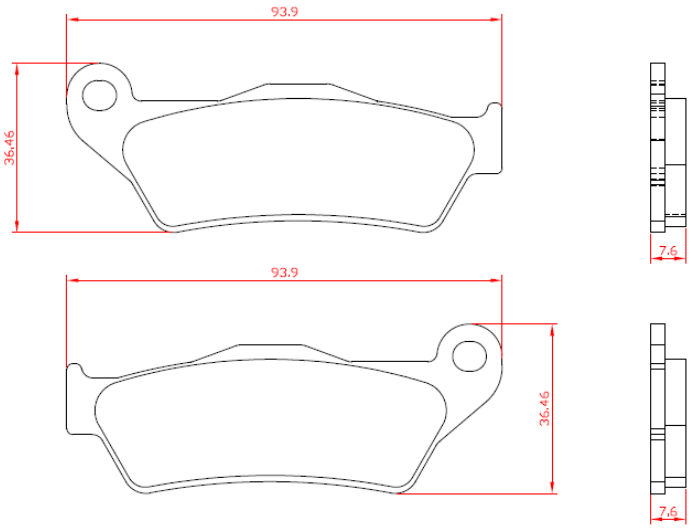

IDIADA CV20021440

Tipo / *Type* : 3030

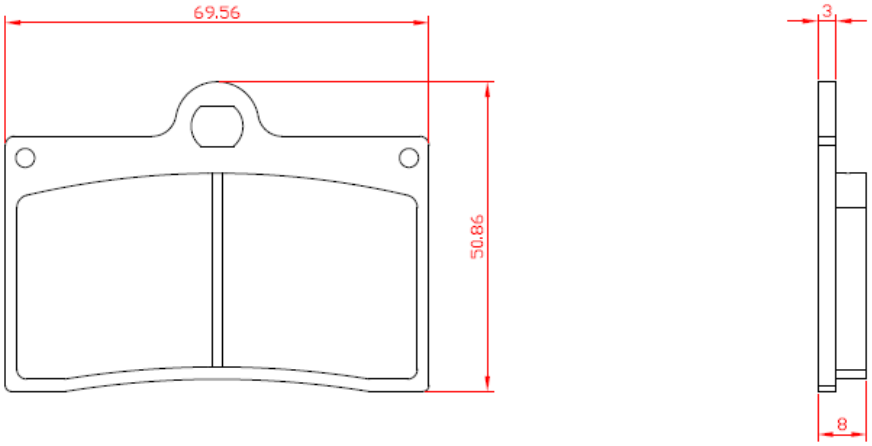

Tipo / *Type* : 3031

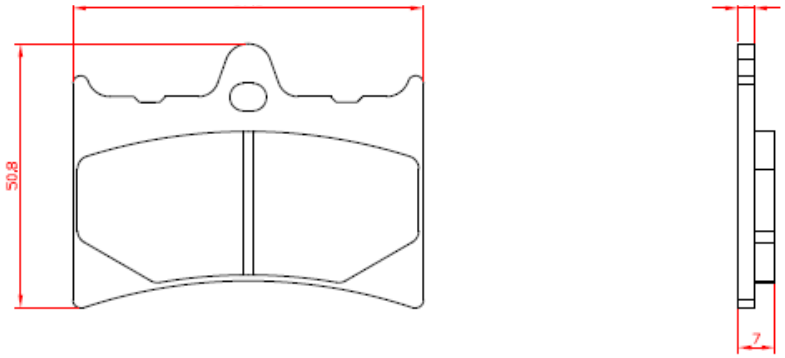

Tipo / *Type* : 3034

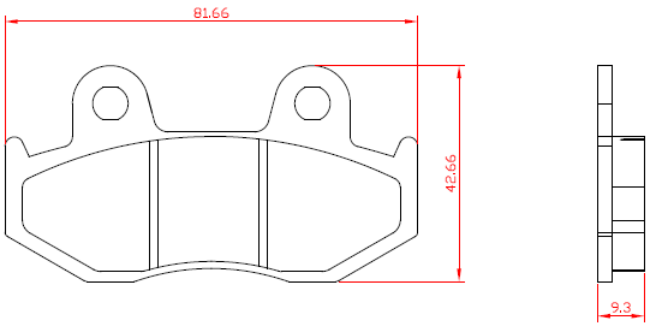

Tipo / *Type* : 3035

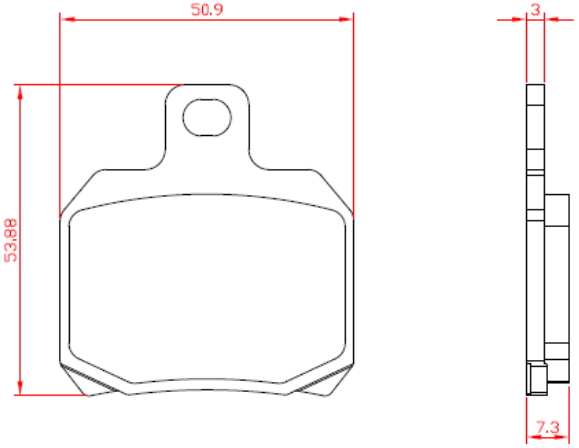

IDIADA CV20021440

Tipo / *Type* : 3038

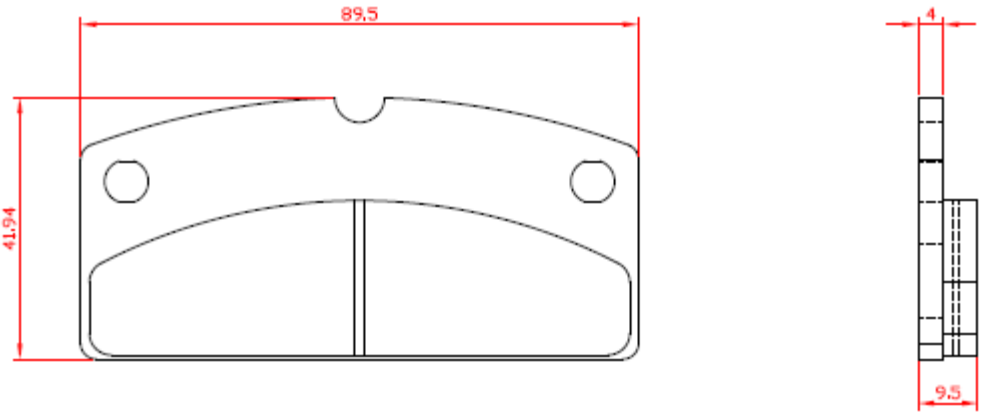

IDIADA CV20021440

Tipo / *Type* : 3041

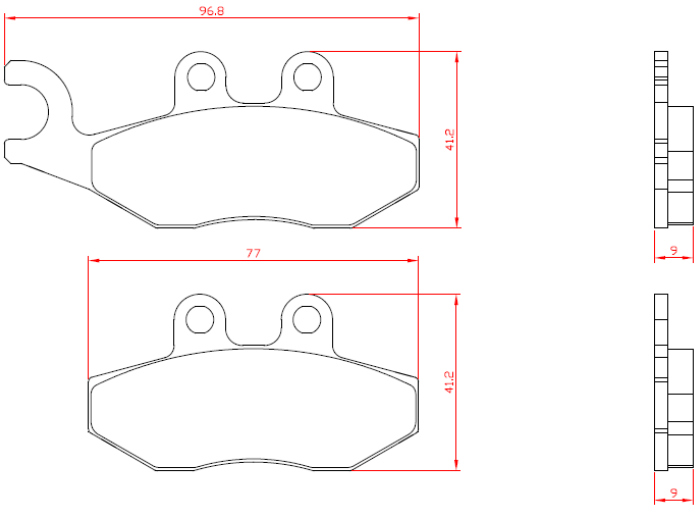

Tipo / *Type* : 3043

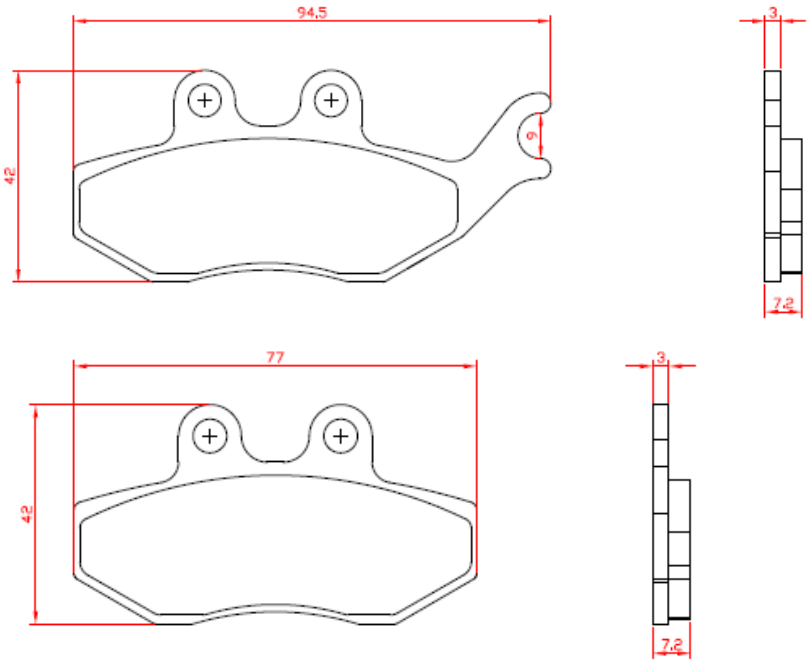

IDIADA CV20021440

Tipo / *Type* : 3047

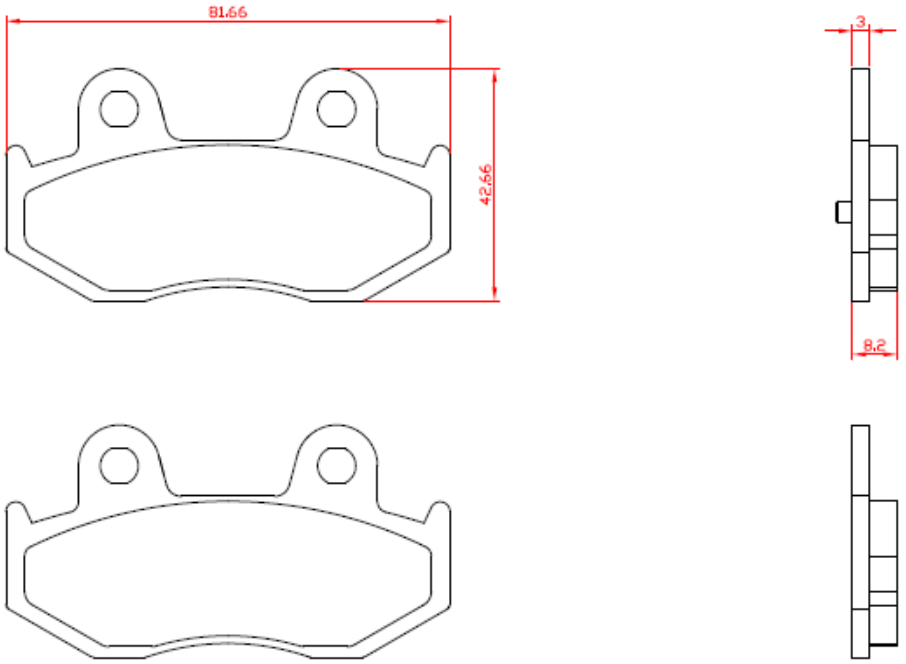

IDIADA CV20021440

Tipo / *Type* : 3052

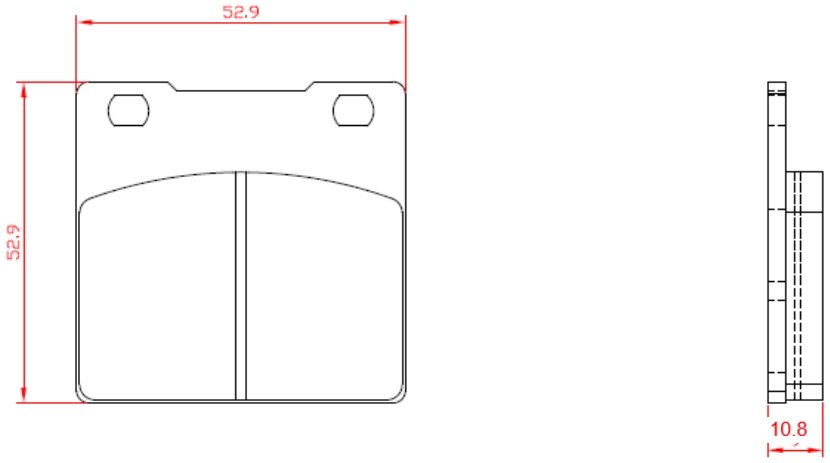

Tipo / *Type* : 3053

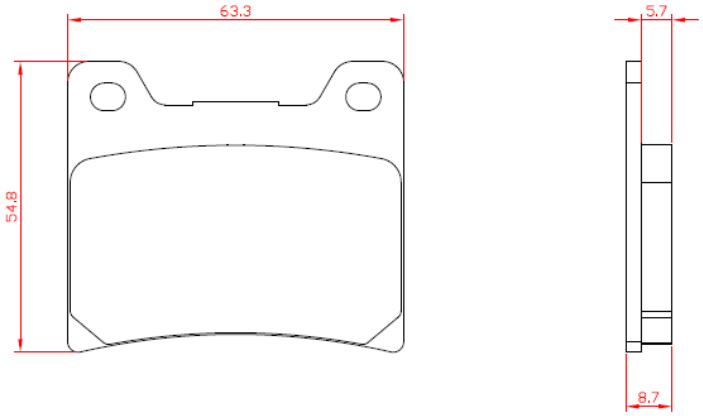

Tipo / *Type* : 3054

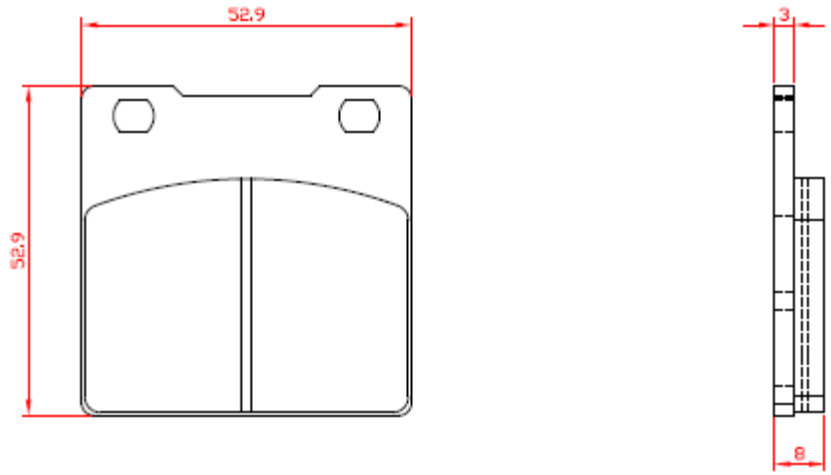

IDIADA CV20021440

Tipo / *Type* : 3058

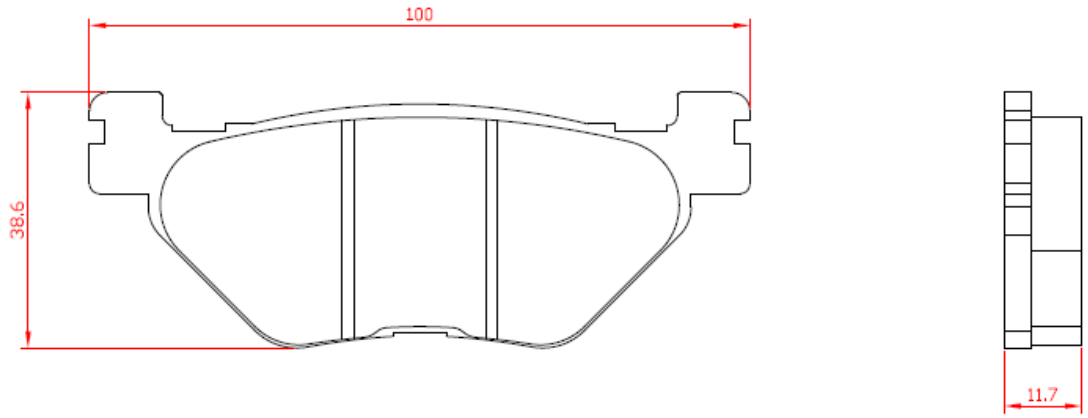

IDIADA CV20021440

Tipo / *Type* : 3059

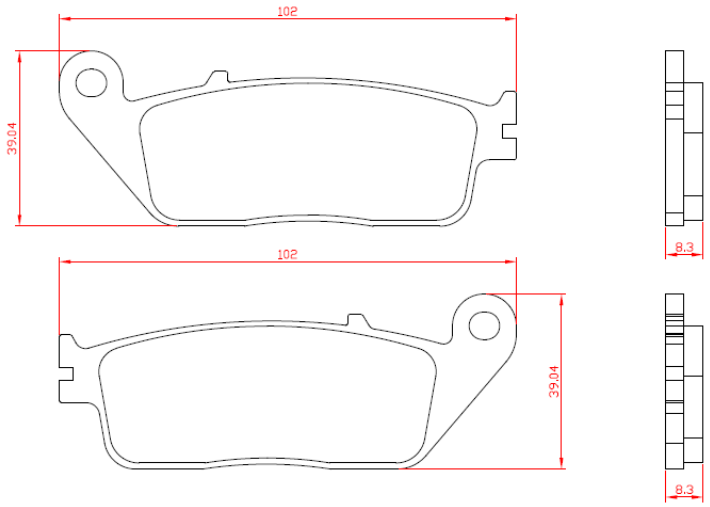

Tipo / *Type* : 3061

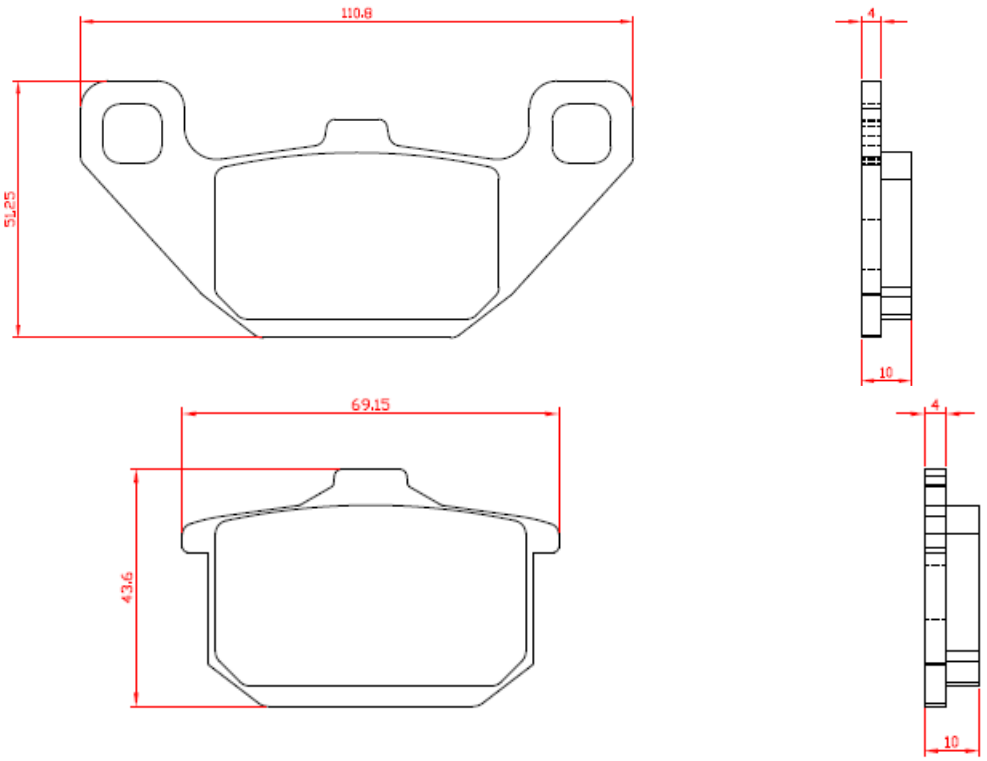

IDIADA CV20021440

Tipo / *Type* : 3062

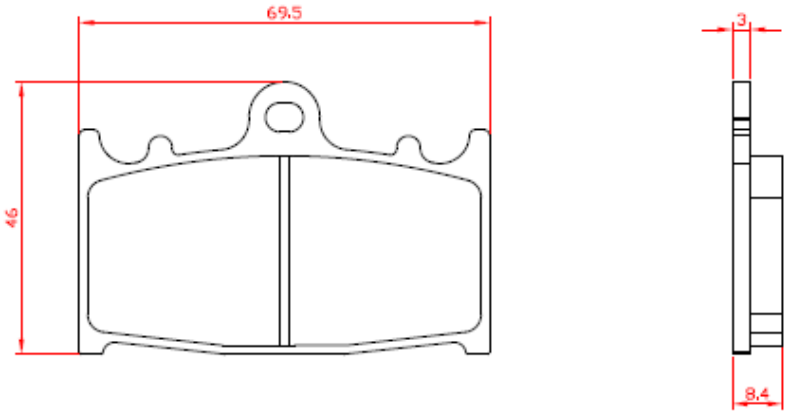

Tipo / *Type* : 3063

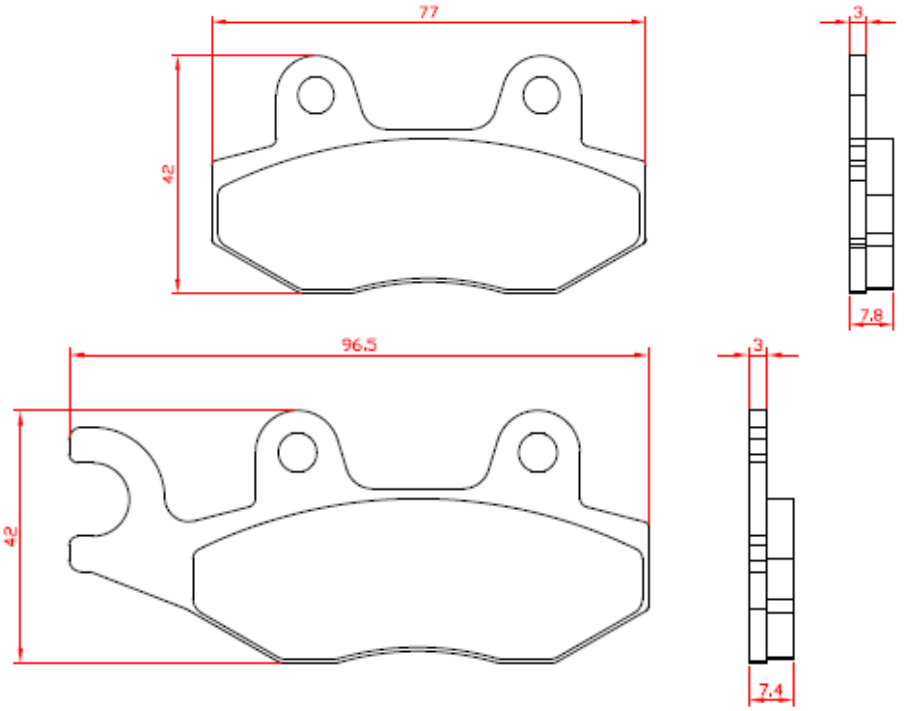

IDIADA CV20021440

Tipo / *Type* : 3064

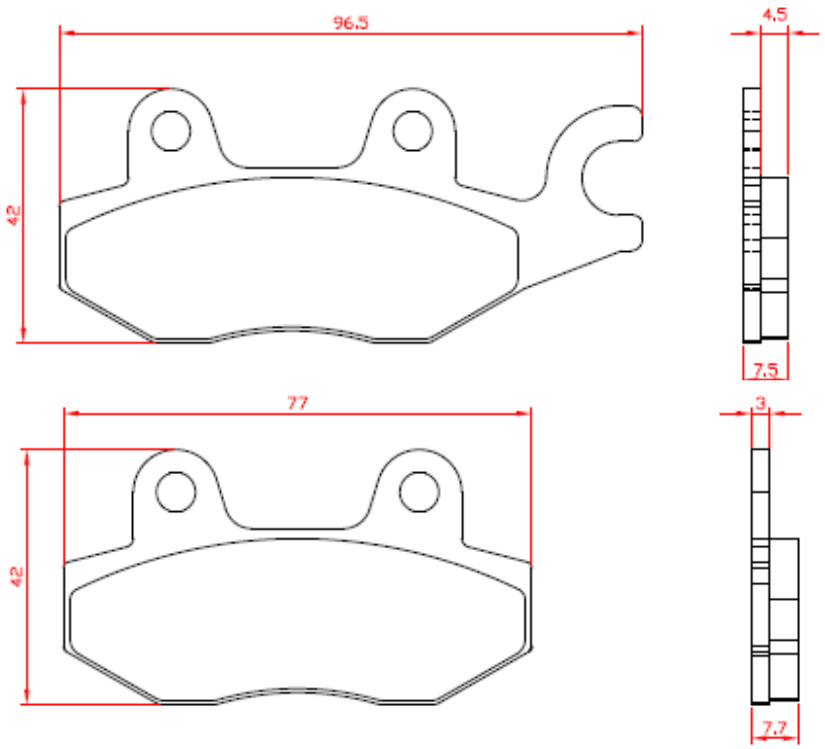

Tipo / *Type* : 3069

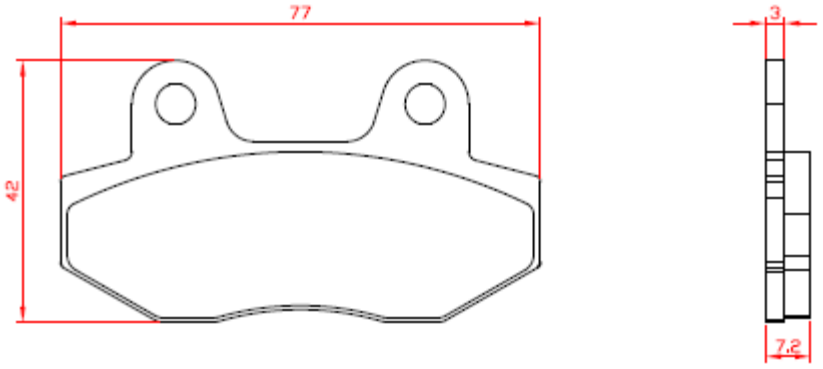

IDIADA CV20021440

Tipo / *Type* : 3070

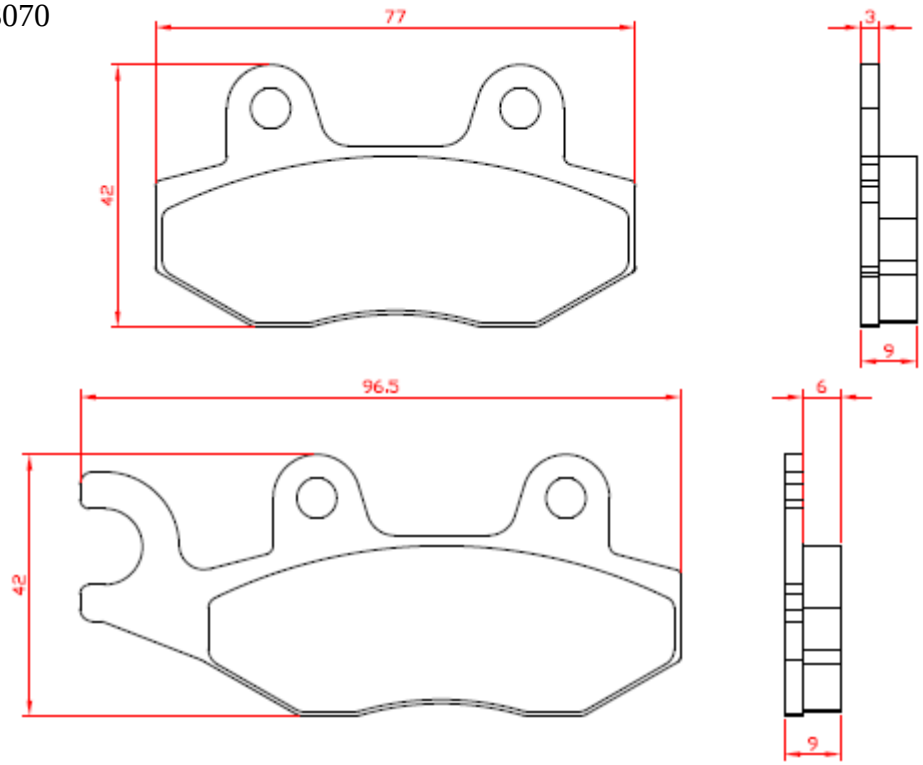

Tipo / *Type* : 3071

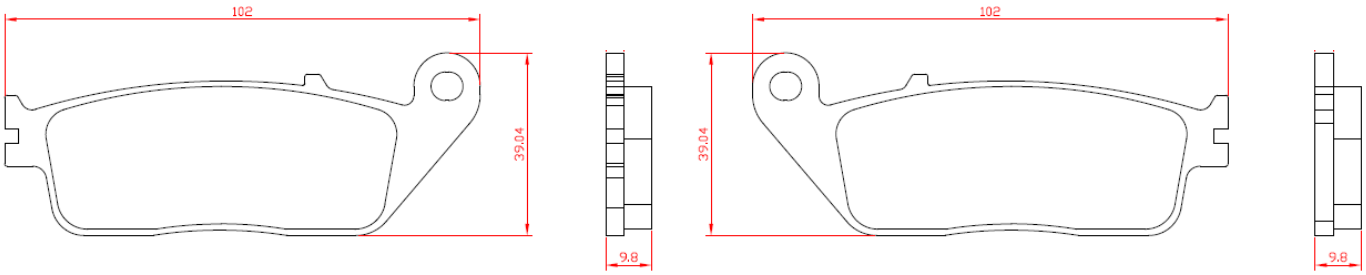

IDIADA CV20021440

Tipo / *Type* : 3072

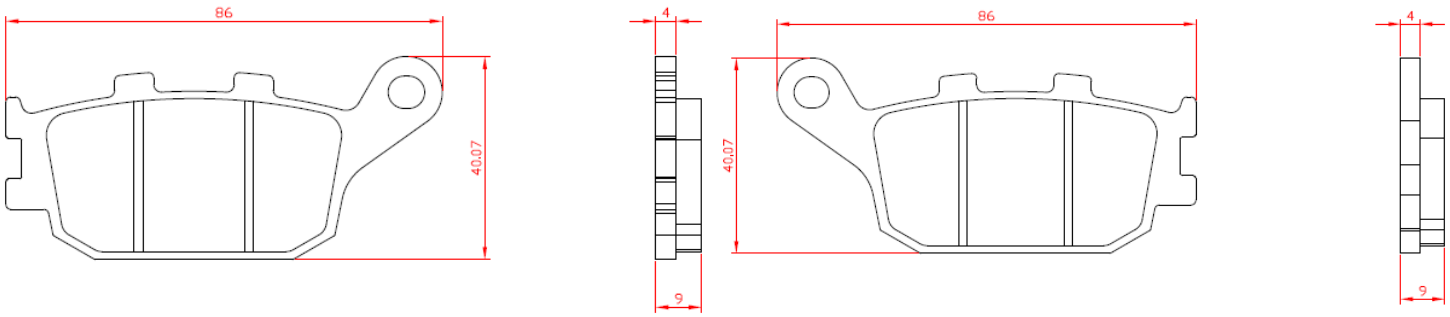

Tipo / *Type* : 3073

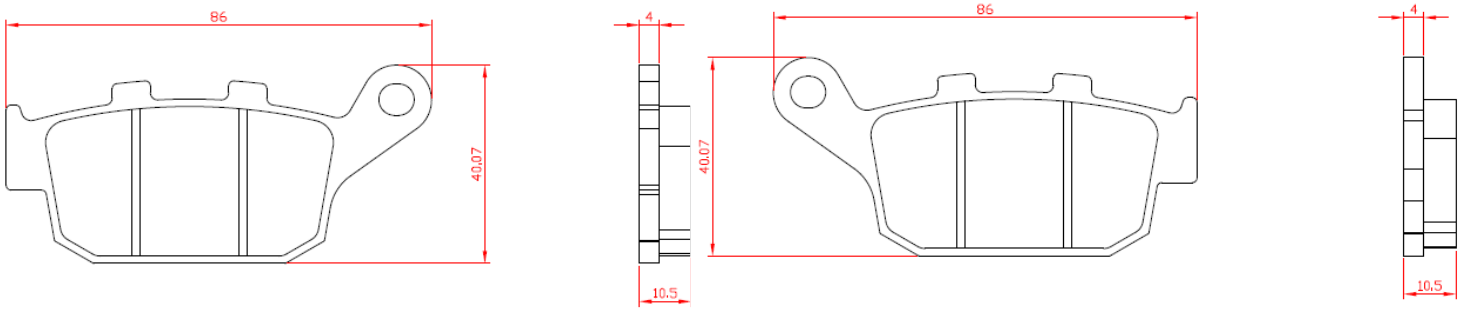

Tipo / *Type* : 3077

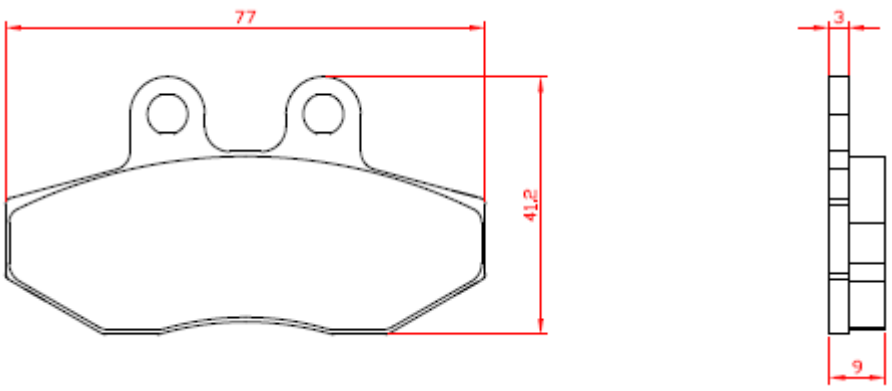

IDIADA CV20021440

Tipo / *Type* : 3078

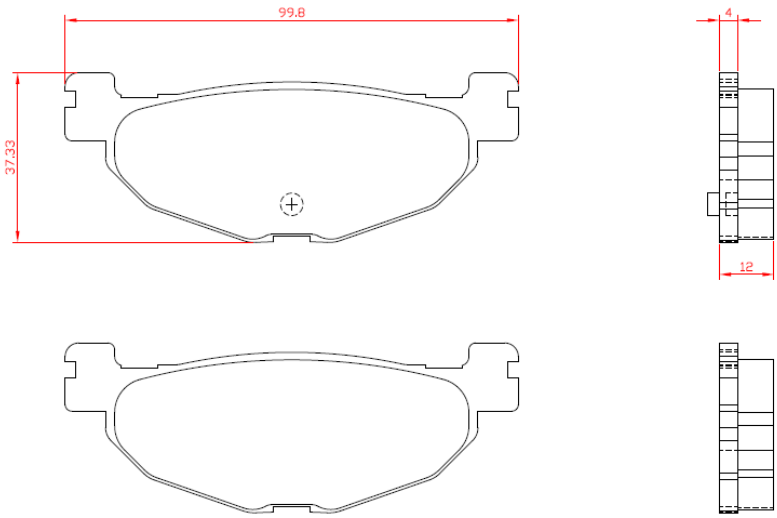

Tipo / *Type* : 3079

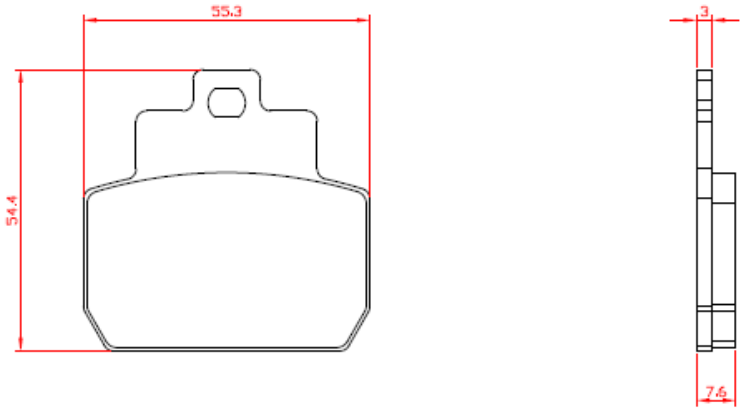

Tipo / *Type* : 3080

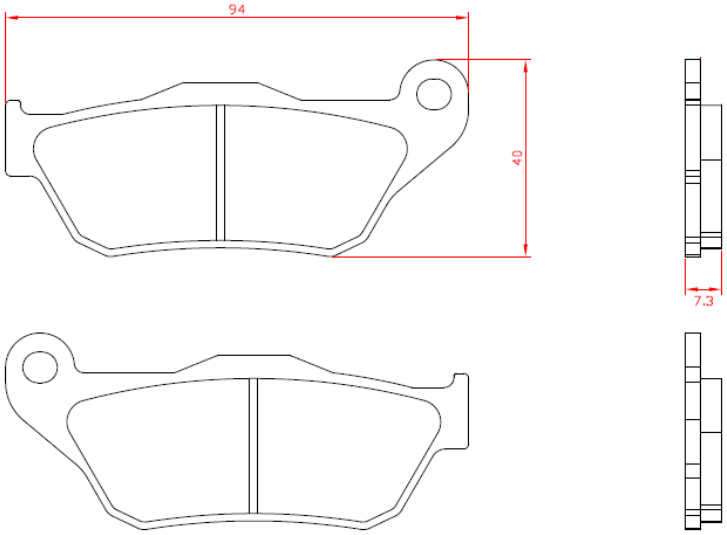

IDIADA CV20021440

Tipo / *Type* : 3084

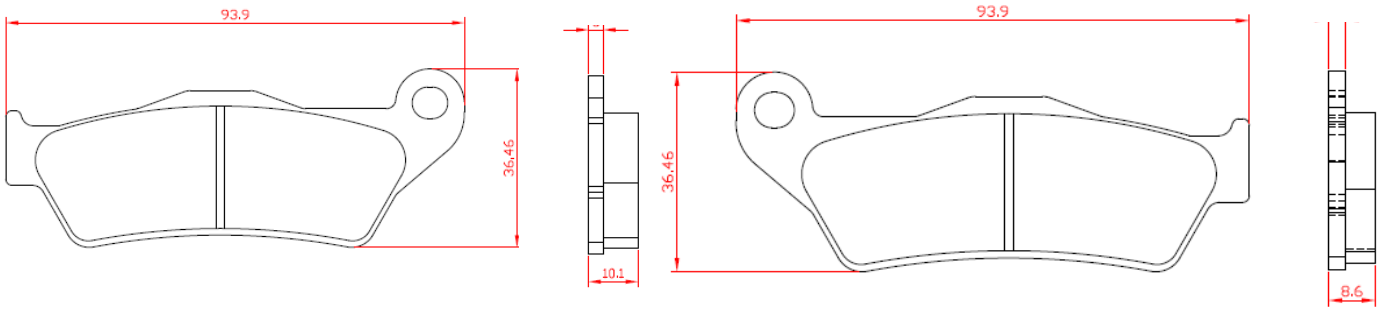

Tipo / *Type* : 3091

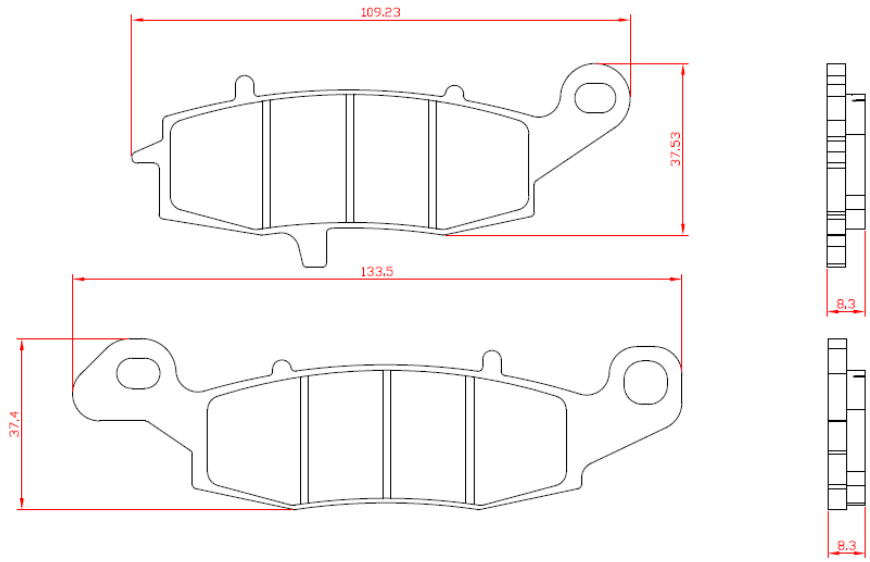

Tipo / *Type* : 3092

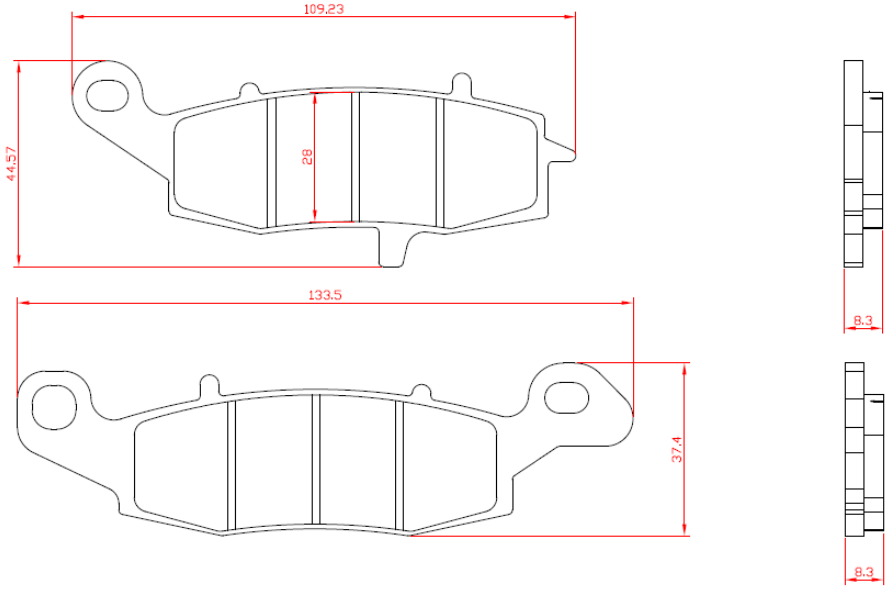

IDIADA CV20021440

Tipo / *Type* : 3094

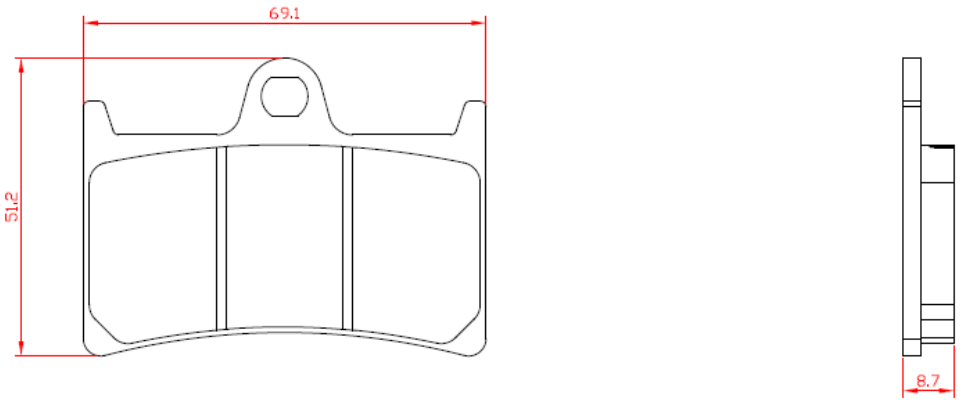

Tipo / *Type* : 3097

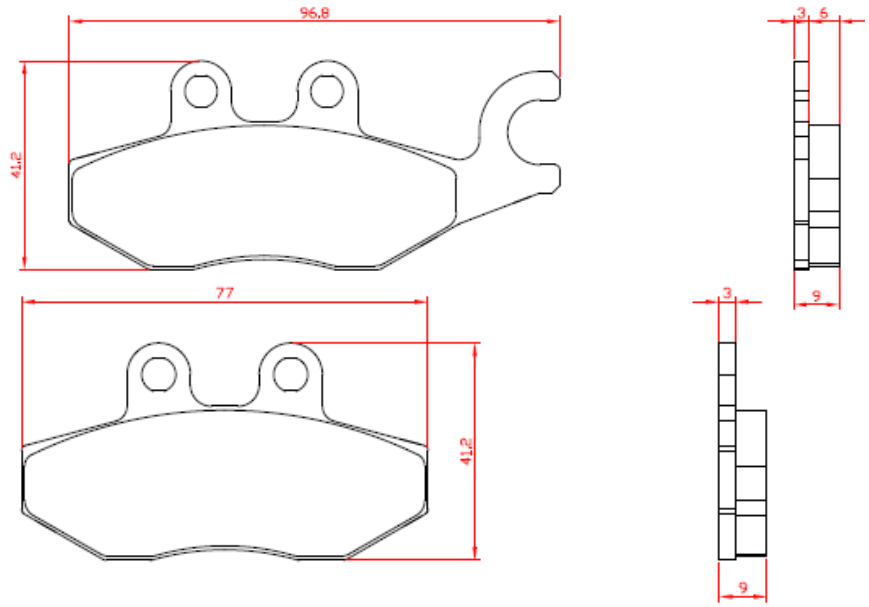

Tipo / *Type* : 3098

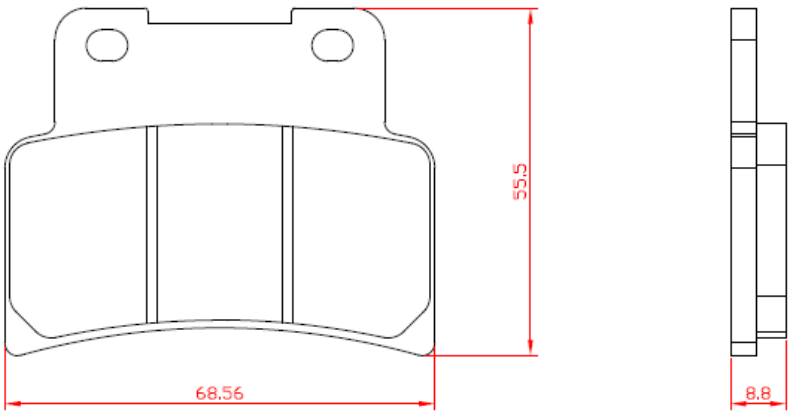

IDIADA CV20021440

Tipo / *Type* : 3100

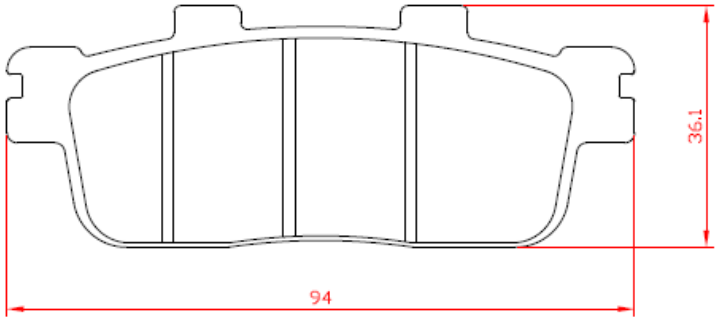

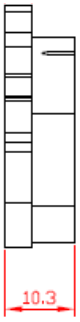

Tipo / *Type* : 3102

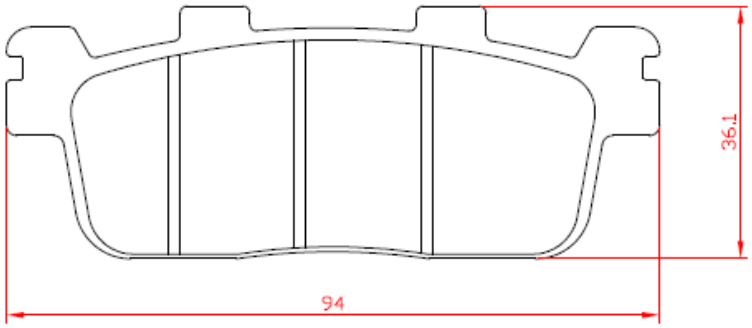

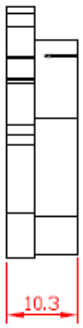

Tipo / *Type* : 3103

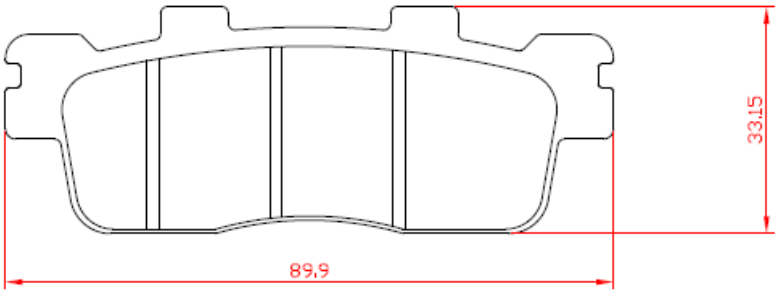

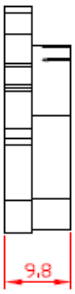

CV20021440

Tipo / *Type* : 3104

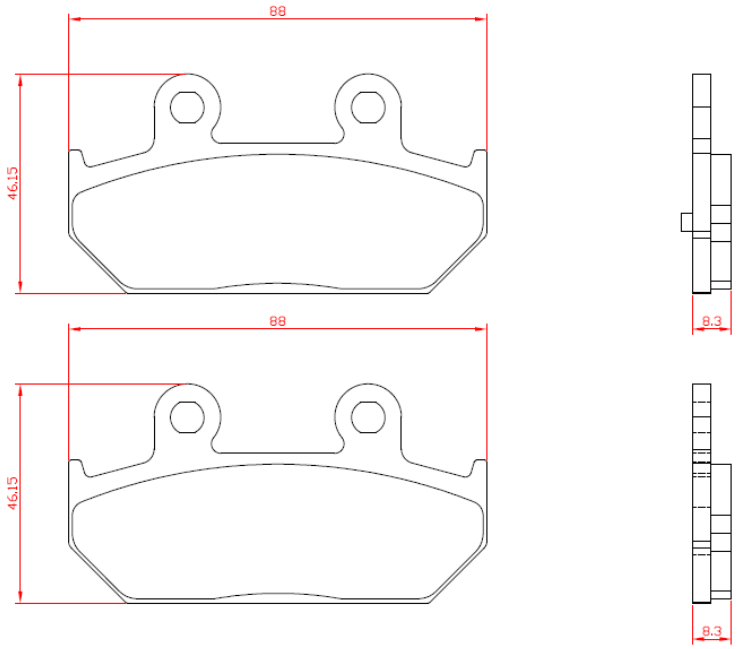

Tipo / *Type* : 3107

4 pieces for set

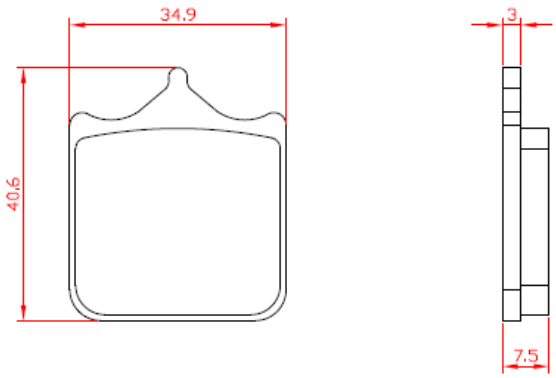

IDIADA CV20021440

Tipo / *Type* : 3112

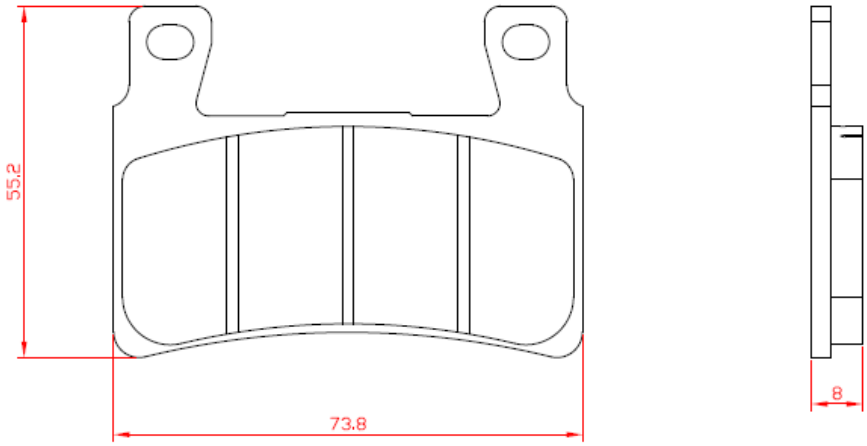

Tipo / *Type* : 3116

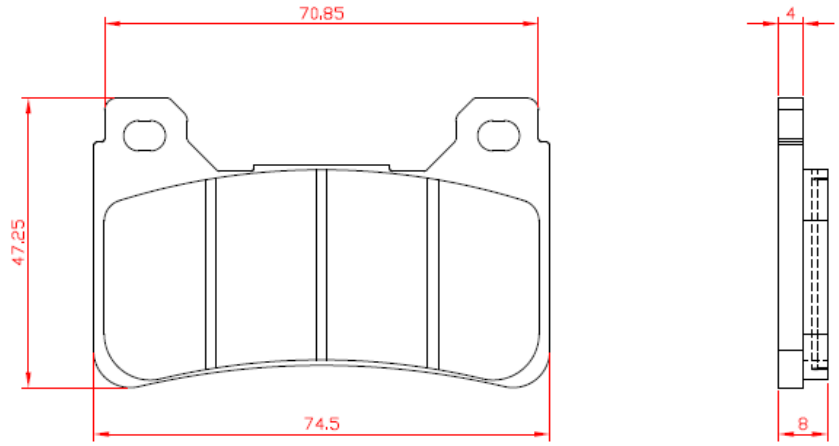

Tipo / *Type* : 3117

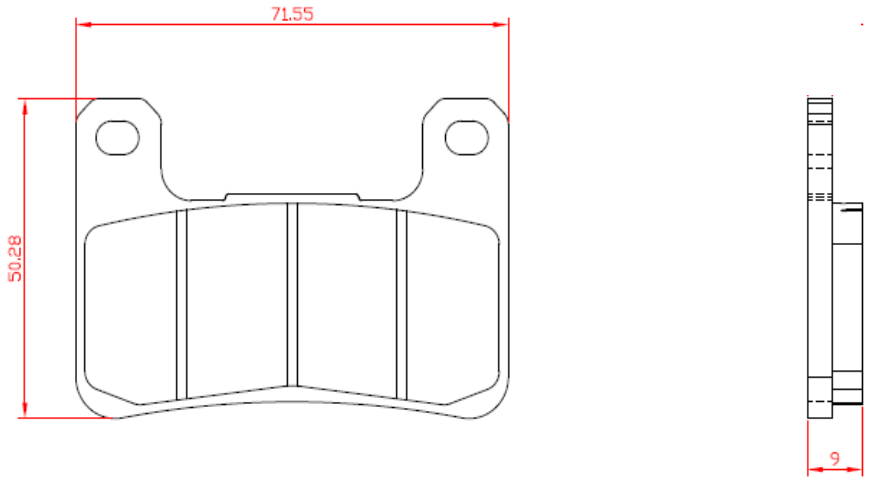

IDIADA CV20021440

Tipo / *Type* : 3123

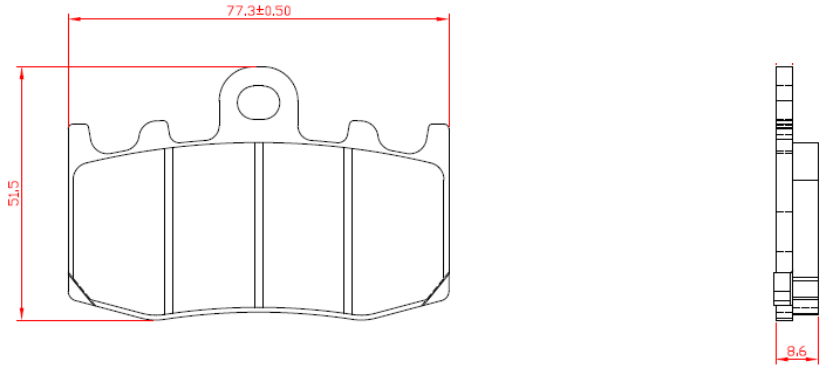

Tipo / *Type* : 3127

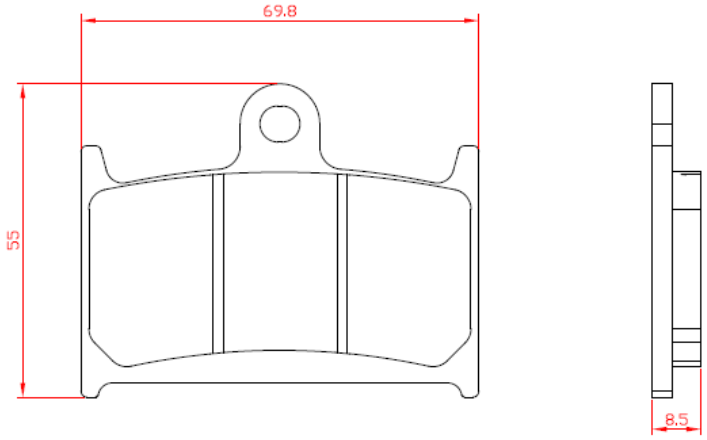

Tipo / *Type* : 3129

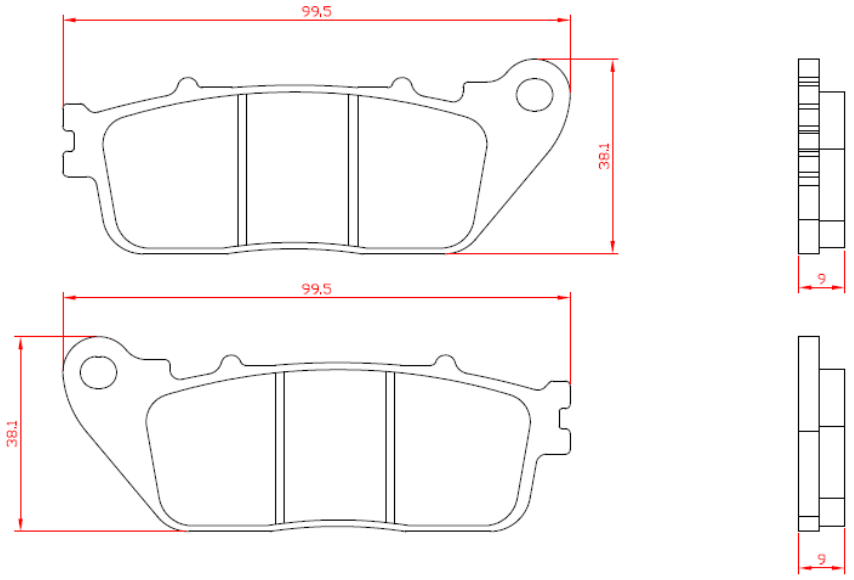

IDIADA CV20021440

Tipo / *Type* : 3131

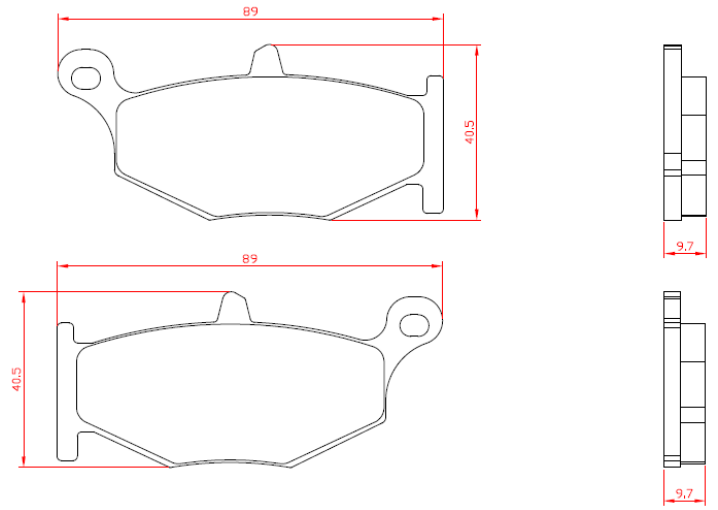

Tipo / *Type* : 3133

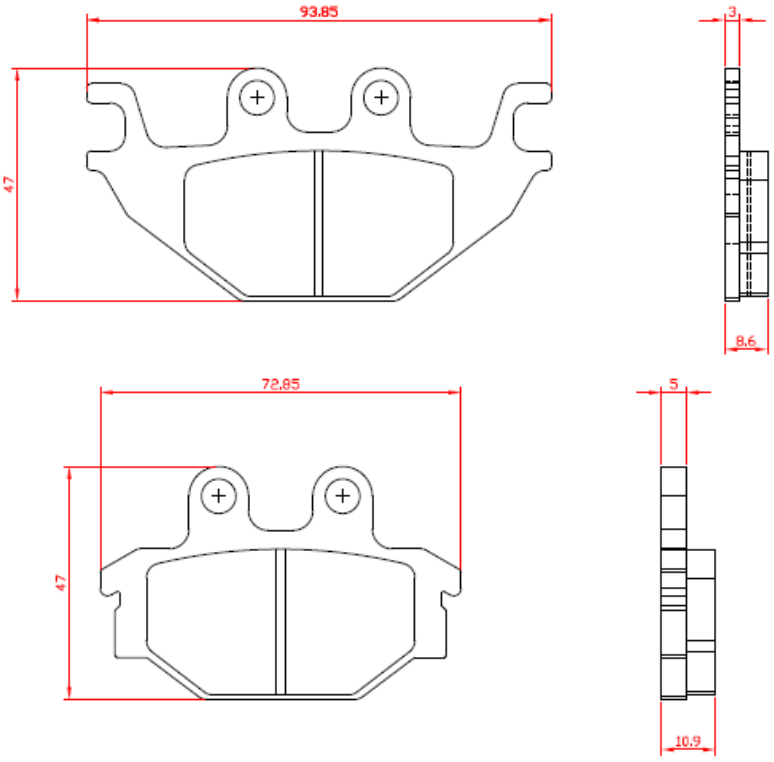

IDIADA CV20021440

Tipo / *Type* : 3136

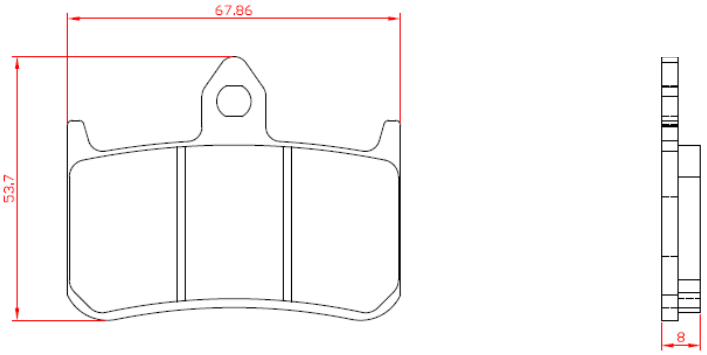

Tipo / *Type* : 3137

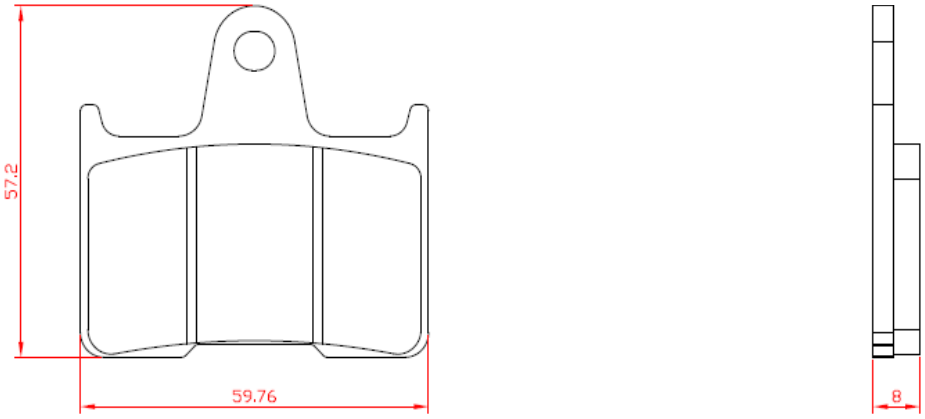

IDIADA CV20021440

Tipo / *Type* : 3139

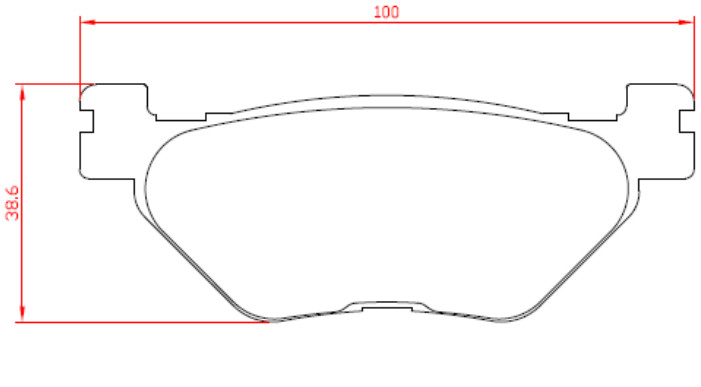

Tipo / *Type* : 3140

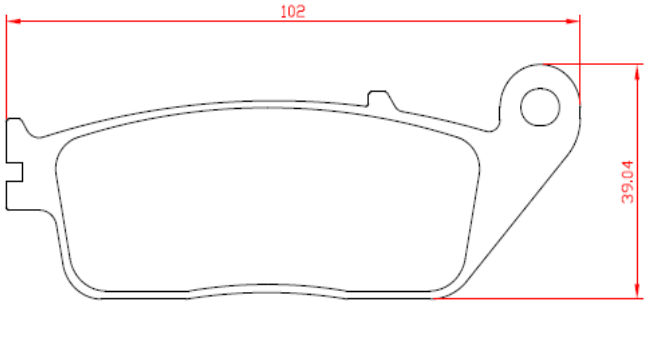

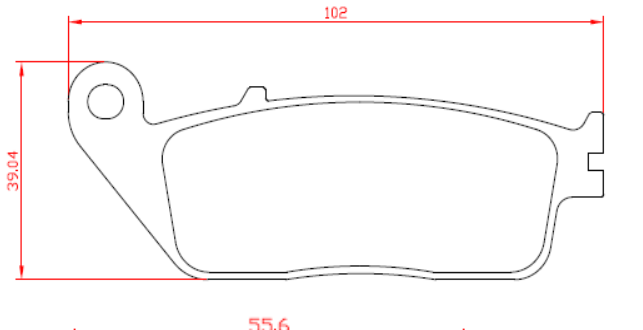

Tipo / *Type* : 3141

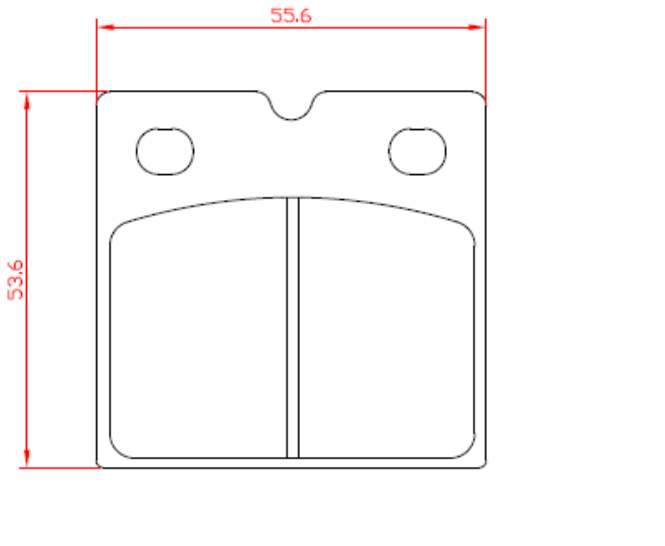

CV20021440

Tipo / *Type* : 3142

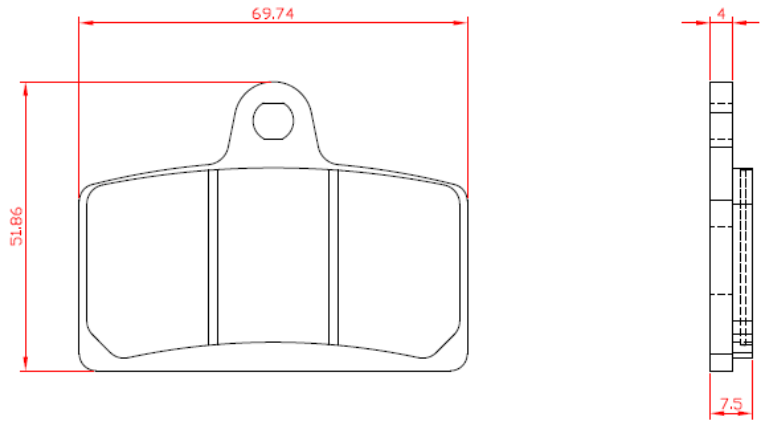

Tipo / *Type* : 3143

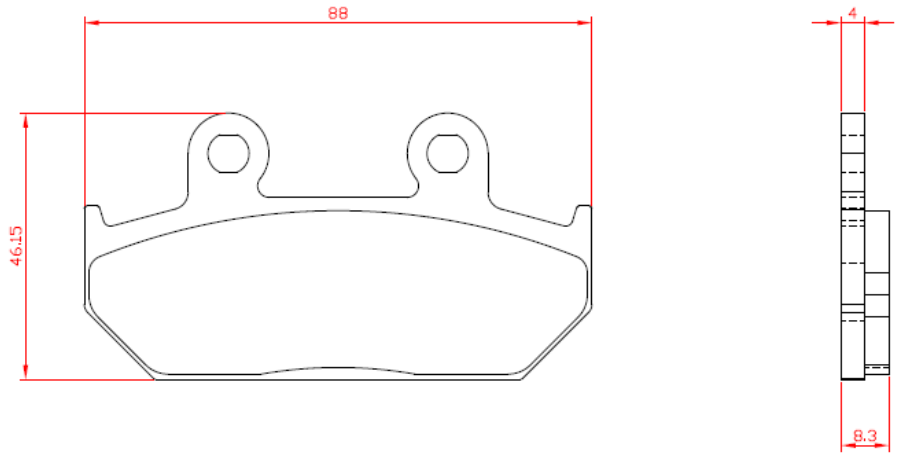

Tipo / *Type* : 3145

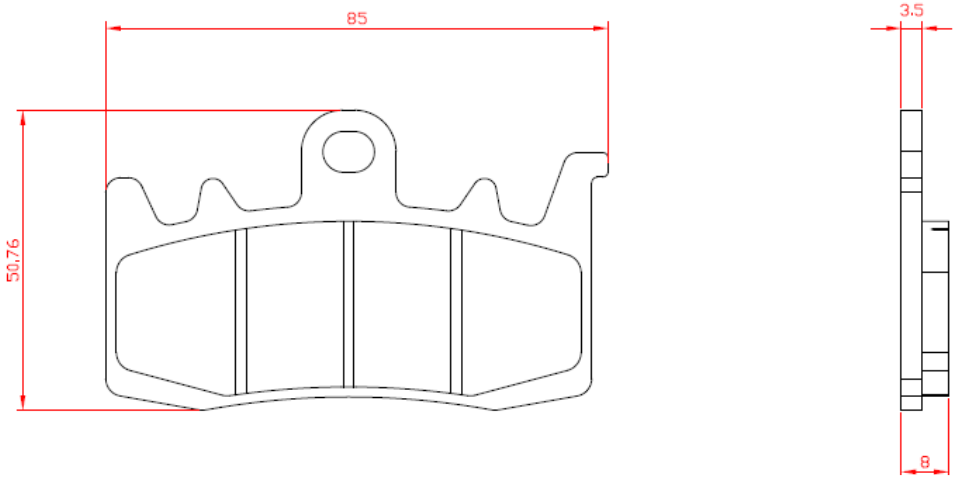

IDIADA CV20021440

Tipo / *Type* : 3146

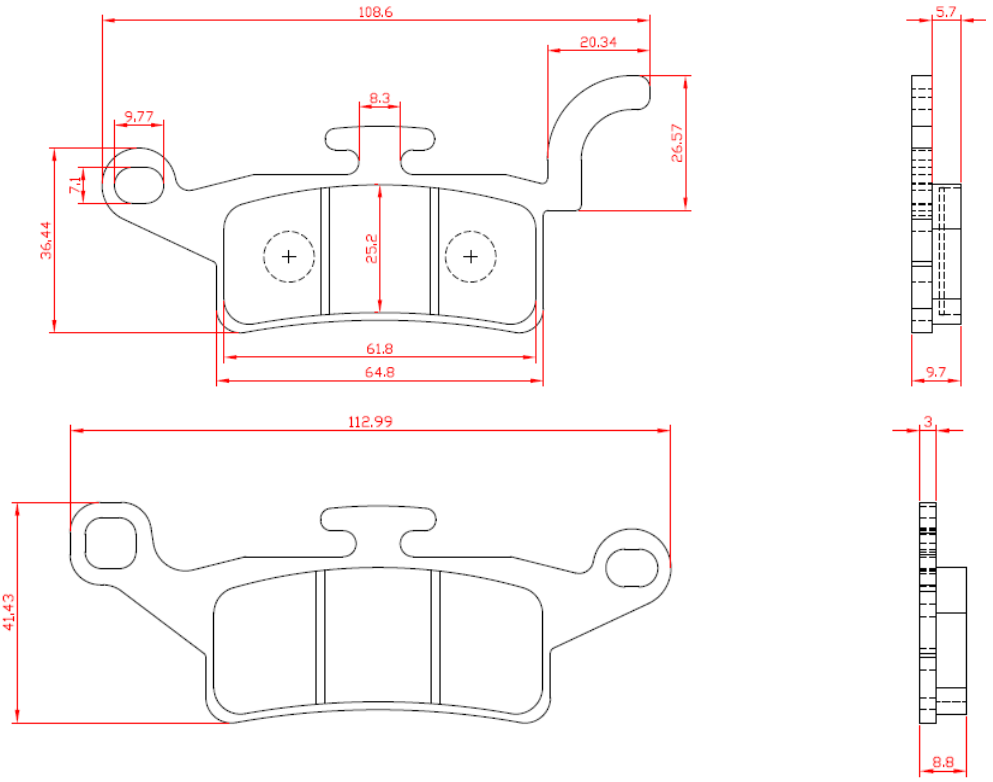

Tipo / *Type* : 3147

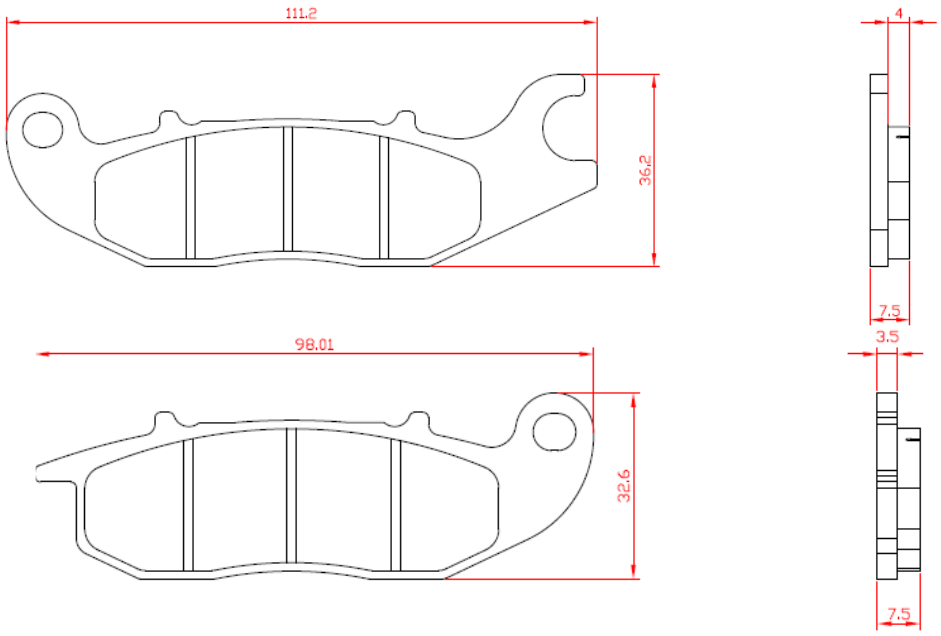

IDIADA CV20021440

Tipo / *Type* : 3148

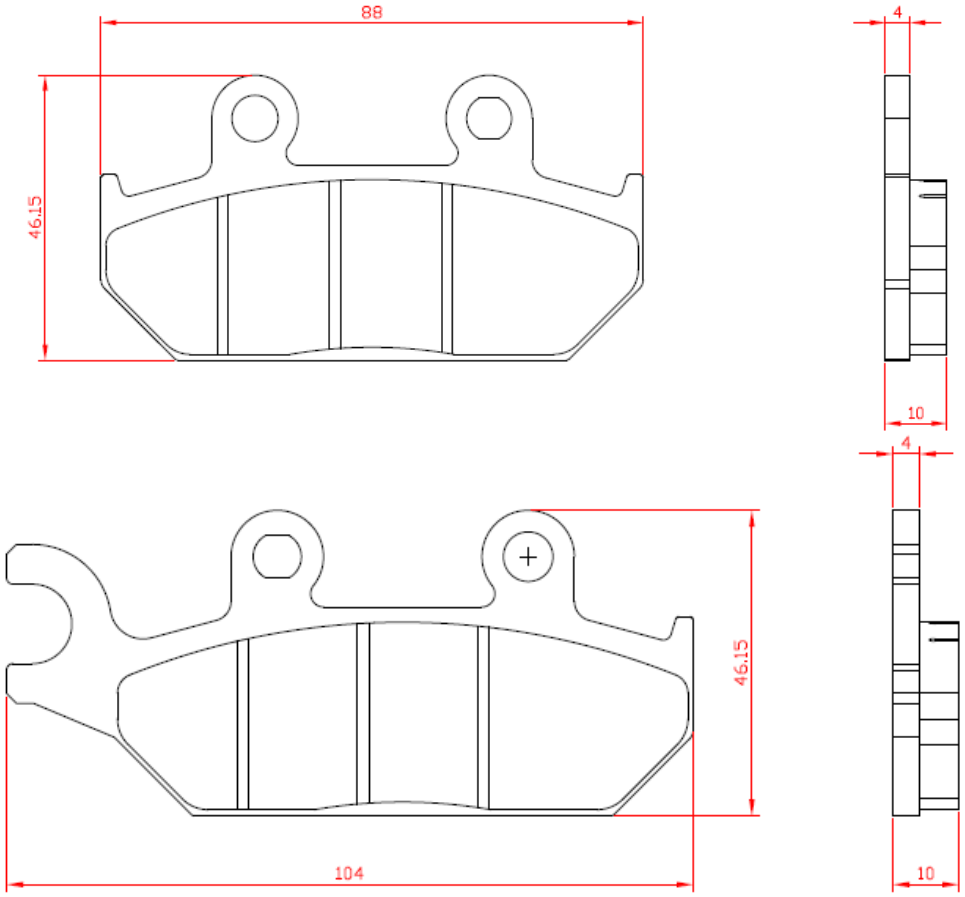

Tipo / *Type* : 3151

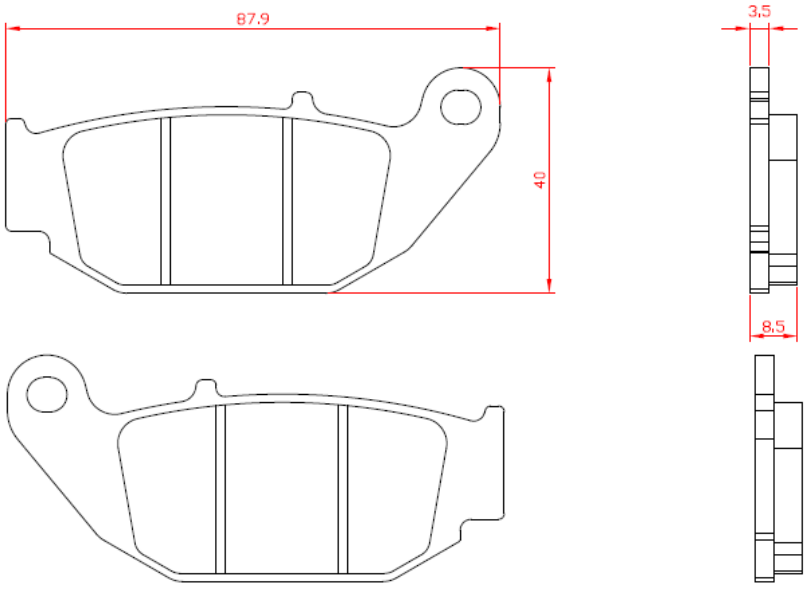

IDIADA CV20021440

Tipo / *Type* : 3153

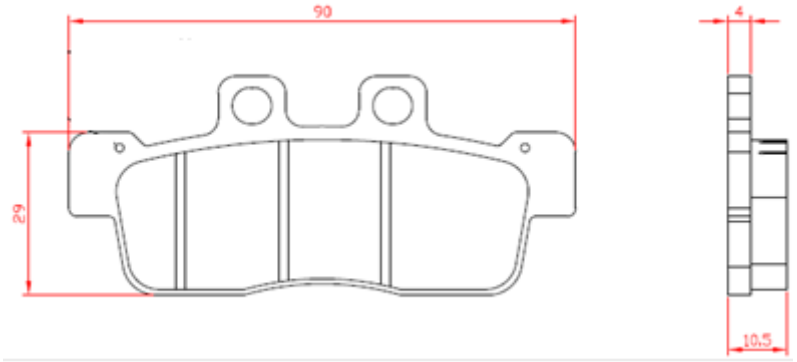

Tipo / *Type* : 3154

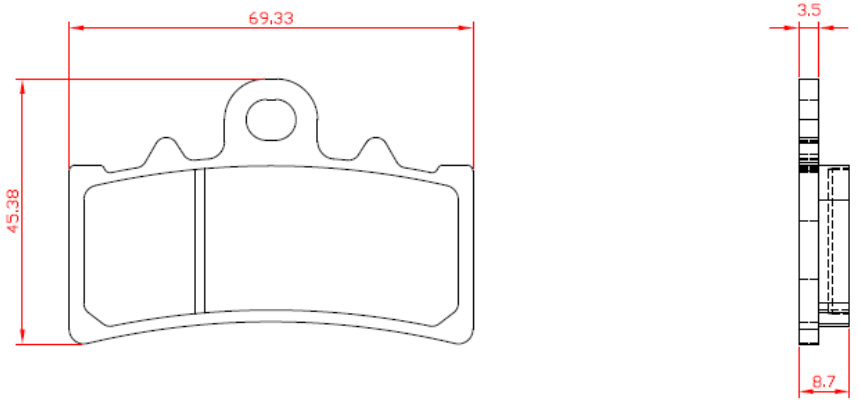

Tipo / *Type* : 3155

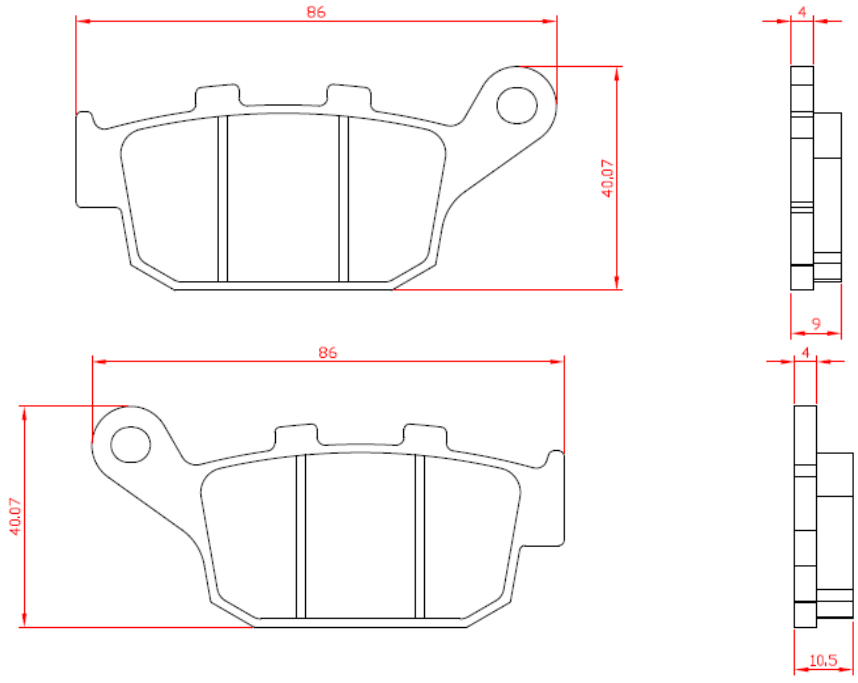

IDIADA CV20021440

Tipo / *Type* : 3162

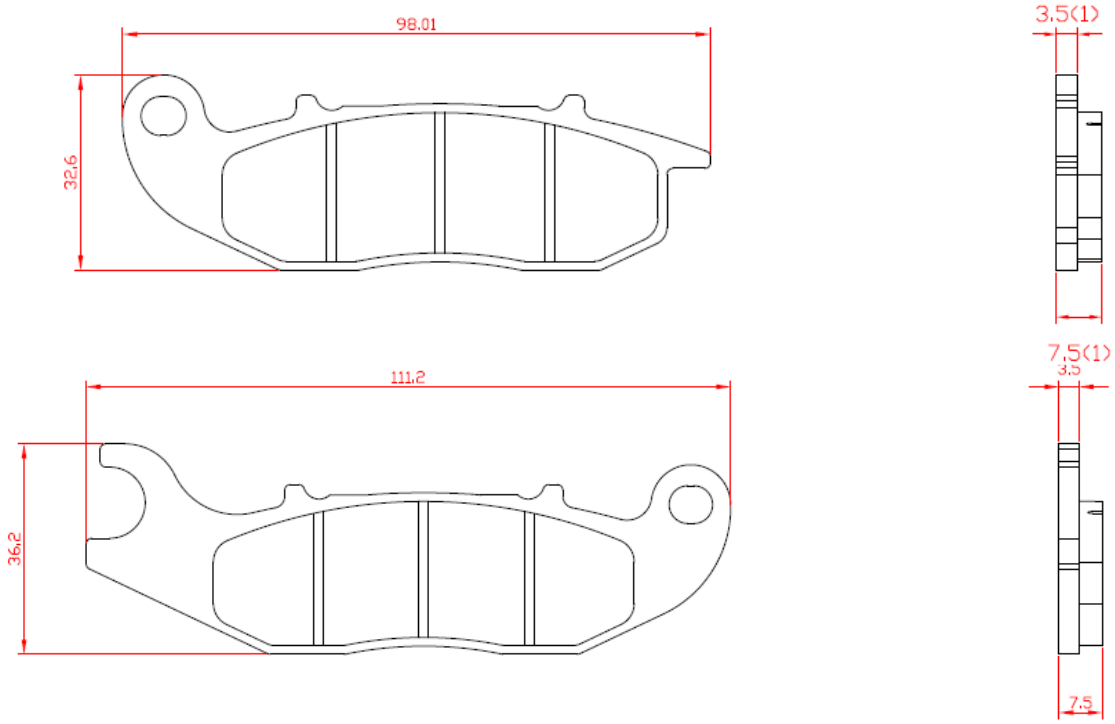

Tipo / *Type* : 3167

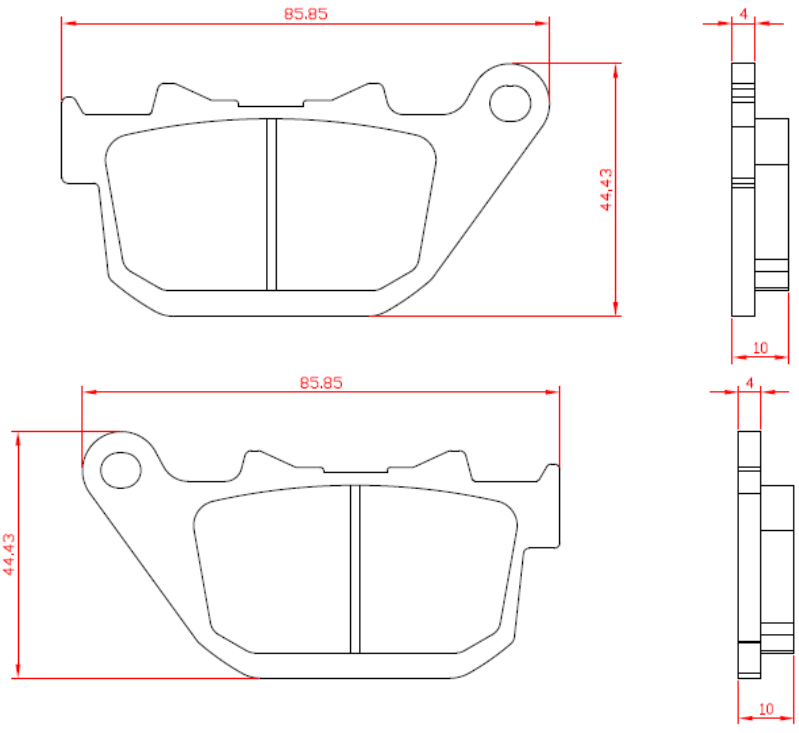

IDIADA CV20021440

Tipo / *Type* : 3174

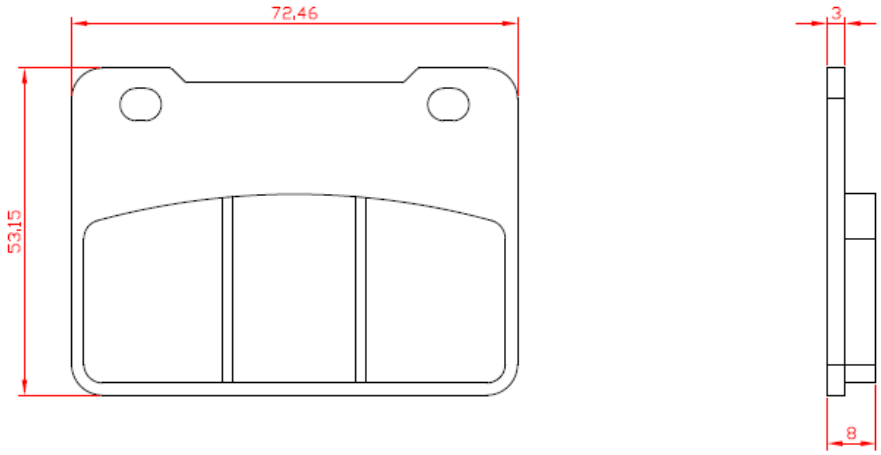

Tipo / *Type* : 3175

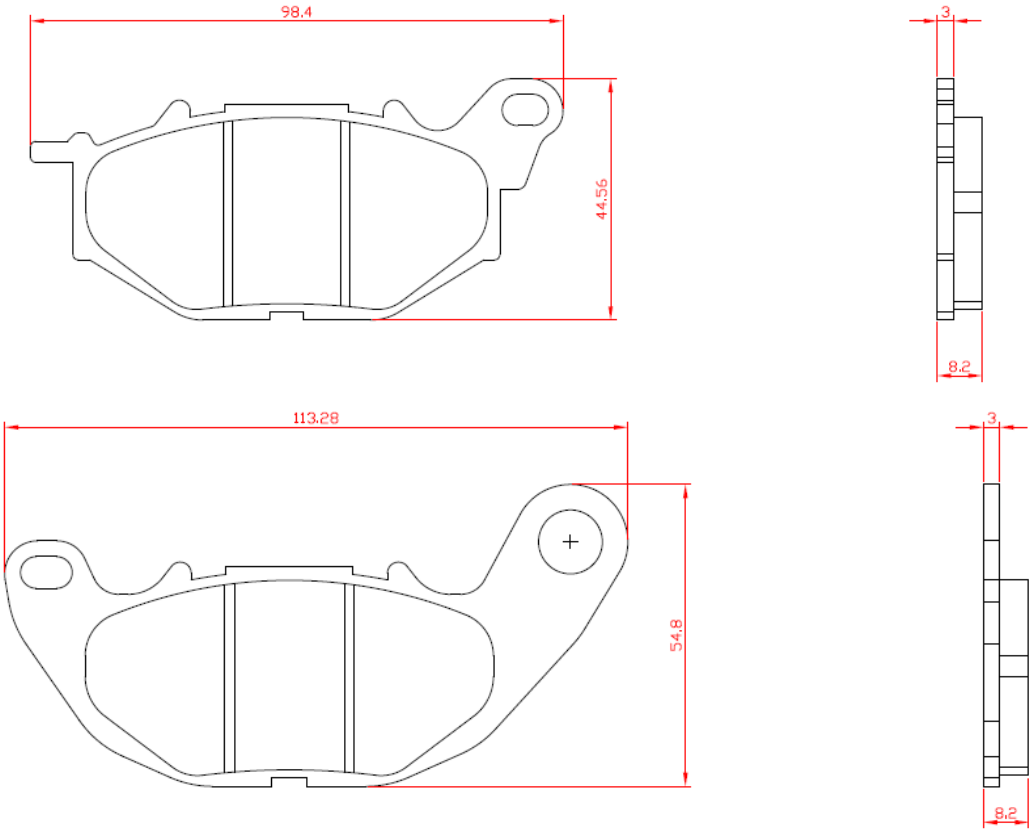

IDIADA CV20021440

Tipo / *Type* : 3176

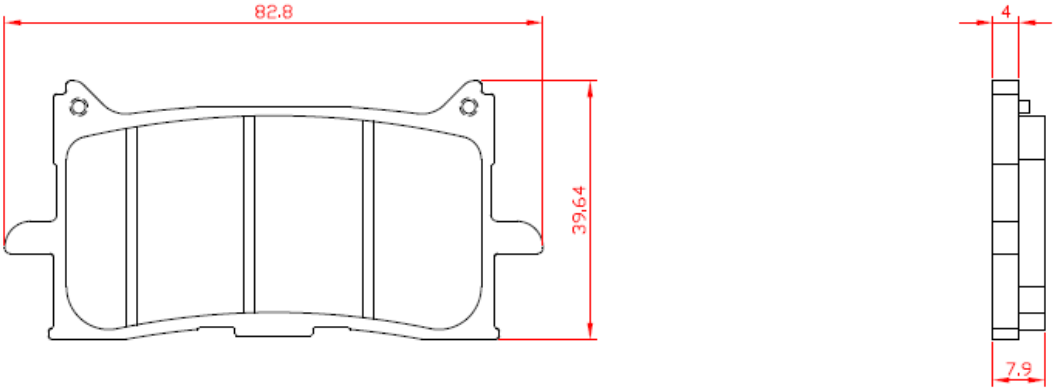

Tipo / *Type* : 3184

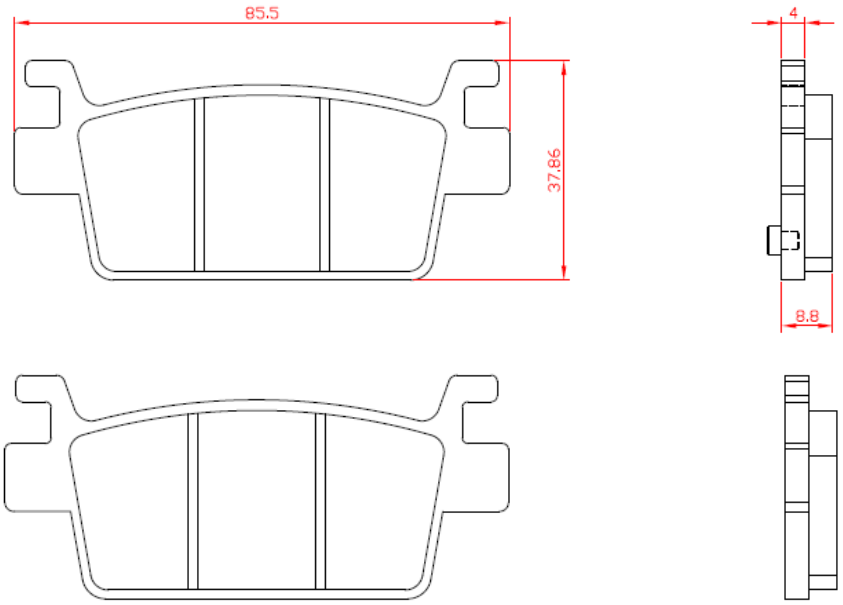

CV20021440

Tipo / *Type* : 3185

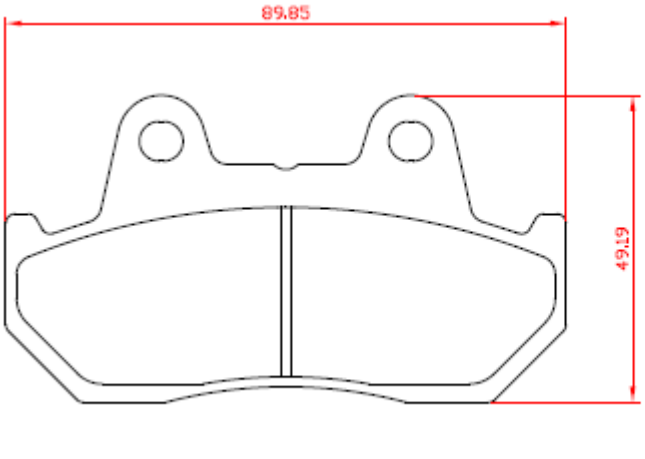

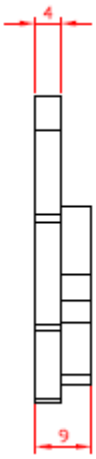

Tipo / *Type* : 3186

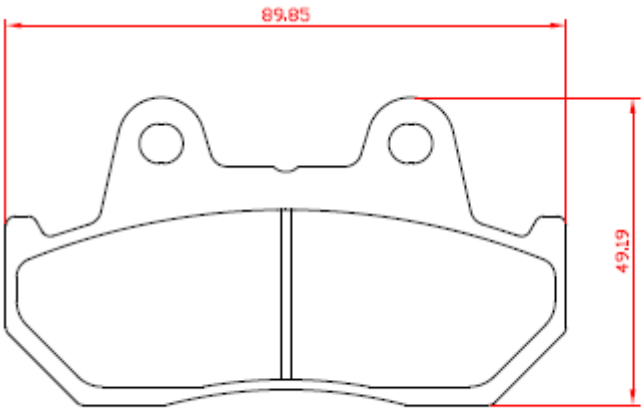

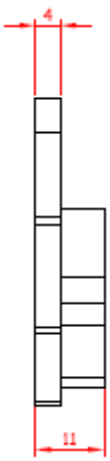

IDIADA CV20021440

Tipo / *Type* : 3188

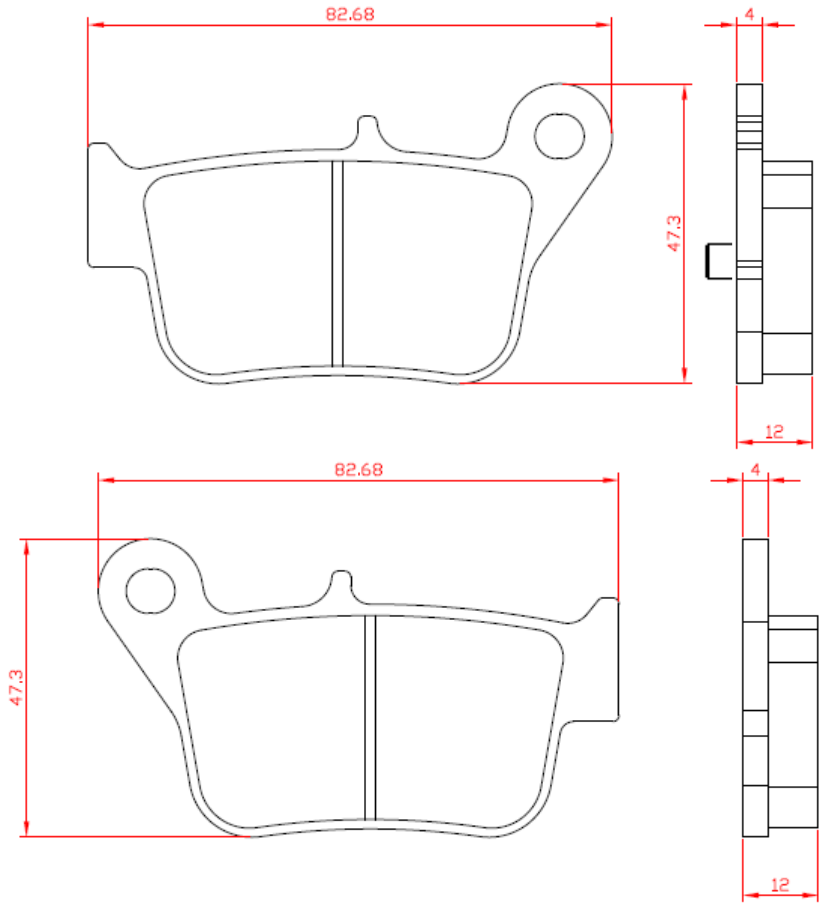

Tipo / *Type* : 3190

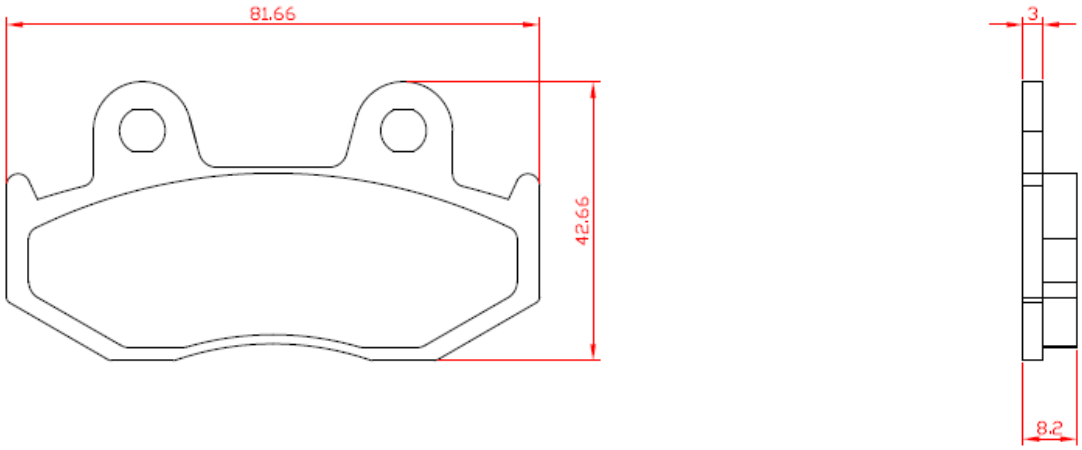

IDIADA CV20021440

Tipo / *Type* : 3196

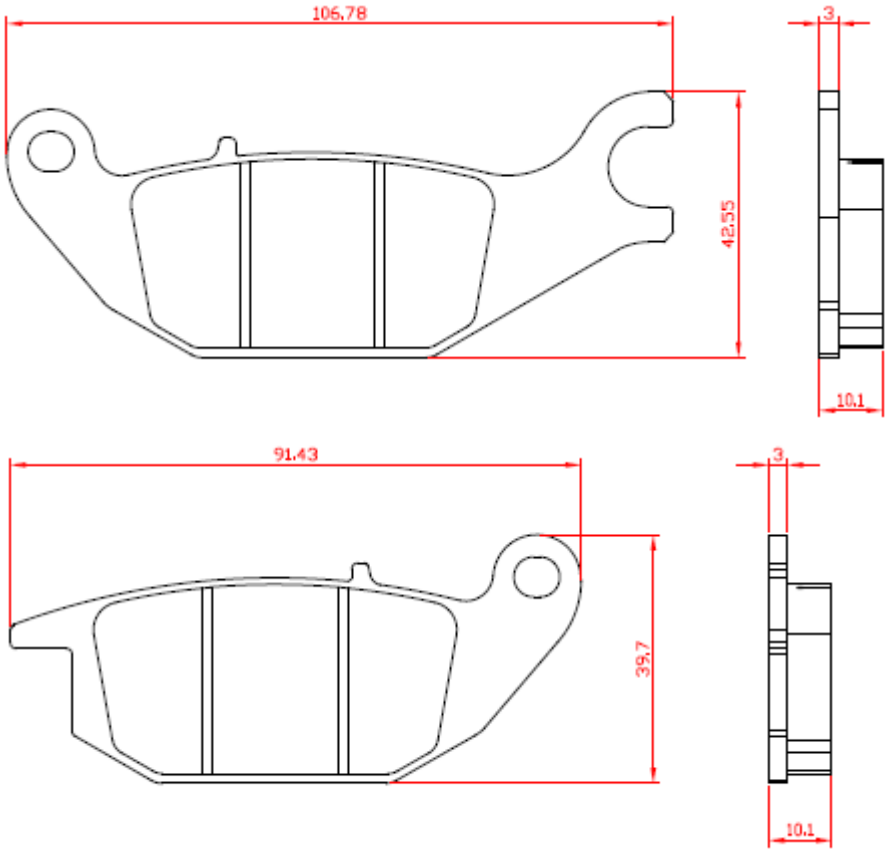

IDIADA CV20021440

Tipo / *Type* : 3201

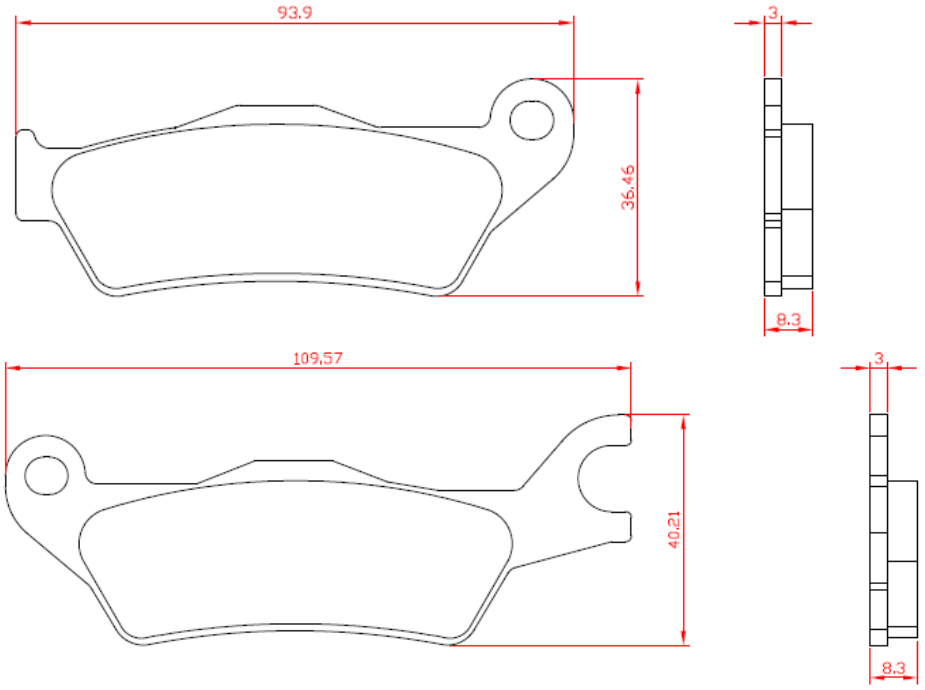

Tipo / *Type* : 3204

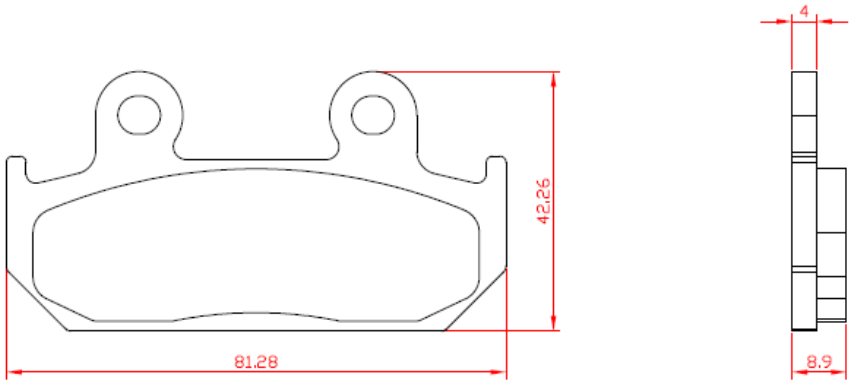

IDIADA CV20021440

Anexo / *Annex* 3: Instrucciones de marcado / *Marking instruccions*

Tipo / *Type* : 3059

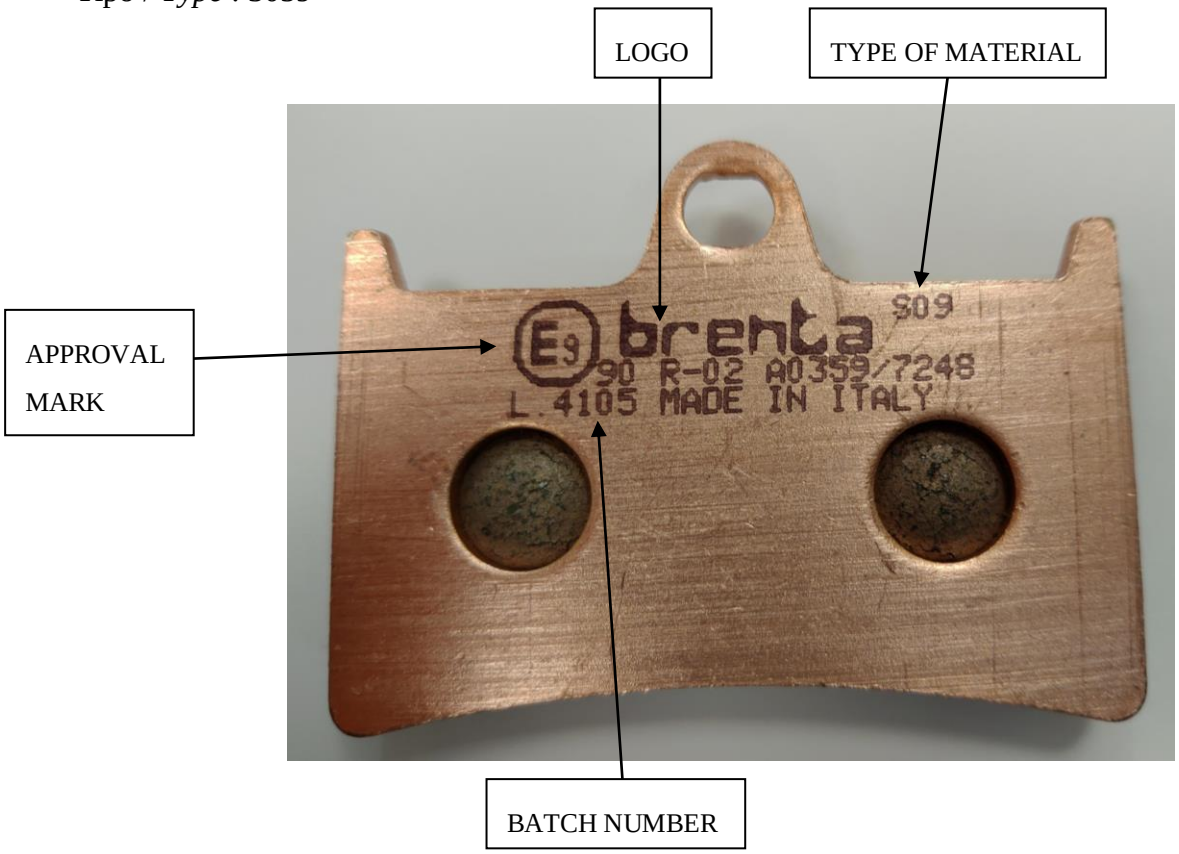

IDIADA CV20021440

Anexo / *Annex* 4: Resultados de ensayo del comportamiento a fricción (anexo 9 del Reglamento UN Nº 90.02) / *Friction behaviour test results (annex 9 of UN Regulation No 90.02)*

Tipo / *Type* : 3059

Material de fricción / *Friction Material*	ME100
Número de lote / *Batch Number*	4060
Fecha de ensayo / *Date of Test*	20/09/2019
Máquina de ensayo / *Test Machine*	KRAUSS

Resultados de ensayo / *Test results*		
Para pastillas / *For pad assemblies*		
μ_{OP}	**μ_{max}**	**μ_{min}**
0.49	0.62	0.37

IDIADA CV20021440

ft frenotecnica s.r.l.

brenta® > brake evolution <

ME 100 - ECE R90

Test	CONSTANT TORQUE		
Bayan no.	0		
LIMS no.	0	Caliper	Brembo
Test no.	0	Disc dia. + thicknes	260 x 4
Operator	0	Disc no.	0
Test Date	20/09/2019	Frict. Radius	95. mm
Formula	0	Pad Area	15. cm²
Reference	3035	Torque 1	10. daN*m
Batch	4060	Torque 2	15. daN*m
Customer	0	Torque 3	18. daN*m
Comment			

WEAR

Pad int =
Pad ext =
Disc =

Verified	Processed
	NO Passed

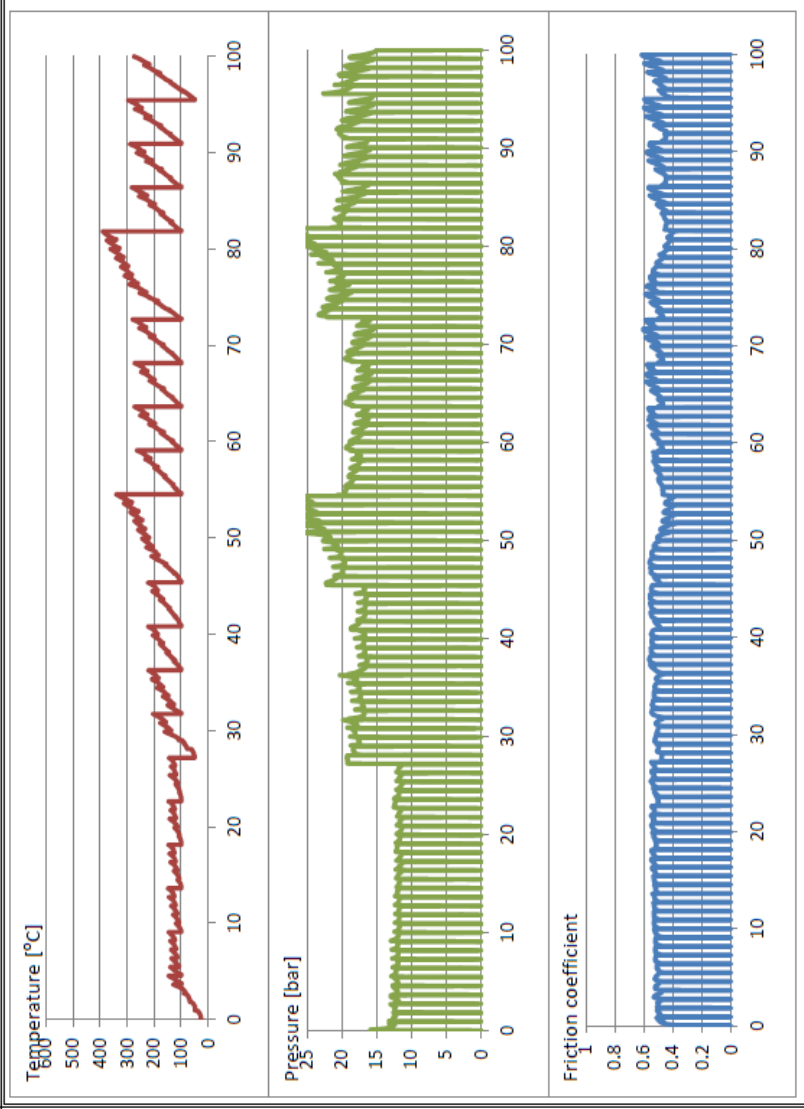

FRICTION VALUES

μOp	= 0.49	μB3	= 0.46	μOp	= 0.00
μmin	= 0.37	μK2	= 0.44	μmin	= 0.00
μmax	= 0.62	μF2	= 0.39	μmax	= 0.00
μK1	= 0.48				
μF1	= 0.37				
μB1	= 0.52				
μB2	= 0.49				

Registered values

IDIADA CV20021440

Anexo / *Annex* 5: Lista de Applicaciones / *Application range*

Tipo / *Type* : 3019

Marca / *Brand*	Vehículo/ Modelo *Vehicle / Model*	Año /*Year*	Motor / *Engine*	Eje / *Axle*
BAOXIN	BX L	97-	125	FRONT
ITALJET	Jupiter	02-	125	FRONT
ITALJET	Jupiter	02-	150	FRONT
ITALJET	Jupiter	01-	250	FRONT
JIANSHE	JS 3	02-	125	FRONT
JINCHENG	JC T-D	06-	150	FRONT
KEEWAY	Supershadow	06-	250	FRONT
LONCIN	LX 6	02-	150	FRONT
MBK	Skyliner	00-	250	FRONT
MBK	Skyliner	04-	400	FRONT
MZ	(MUZ) S	01- 02	1000	REAR
QUINGOI	QM 2V	02-	125	FRONT
YAMAHA	SR R	97- 02	125	FRONT
YAMAHA	TDR	93- 03	125	FRONT
YAMAHA	TZR Virago	93	125	FRONT
YAMAHA	XV Drag Star	97- 00	125	FRONT
YAMAHA	XVS S Virago	00-	125	FRONT
YAMAHA	XV Drag Star	95- 07	250	FRONT
YAMAHA	XVS D Majesty DX	01-	250	FRONT
YAMAHA	YP Majesty	98-	250	FRONT
YAMAHA	YP Majesty DX/ABS	96-	250	FRONT
YAMAHA	YP	99	250	FRONT
YAMAHA	SR Majesty	14-	400	FRONT
YAMAHA	YP	05-	400	FRONT
YAMAHA	XP TMAX	04- 07	500	FRONT

YAMAHA	FZ6 Fazer	04-	600	FRONT
YAMAHA	FZ6	04-	600	FRONT
YAMAHA	FZ6R N	09-	600	FRONT
YAMAHA	XJ S Diversion	98-	600	FRONT
YAMAHA	XJ Diversion	98- 03	600	FRONT
YAMAHA	XJ6	09-	600	FRONT
YAMAHA	XJ6-F	09-	600	FRONT
YAMAHA	XJ6-N	09-	600	FRONT
YAMAHA	XJ6-S	09-	600	FRONT
YAMAHA	MT-03 Virago	06- 13	660	FRONT
YAMAHA	XV Drag Star	99	1100	FRONT
YAMAHA	XVS Drag Star Classic	99- 06	1100	FRONT
YAMAHA	XVS A Midnight Star	00- 06	1100	FRONT
YAMAHA	XVS Custom	07- 11	1300	FRONT
YAMAHA	XVS	14-	1300	FRONT

Tipo / *Type* : 3020

Marca / *Brand*	**Vehículo/ Modelo *Vehicle / Model***	**Año /*Year***	**Motor / *Engine***	**Eje / *Axle***
APRILIA	Scarabeo Ditech	02-	50	REAR
APRILIA	SR Ditech	01- 06	50	REAR
APRILIA	SR Racing	00-	50	REAR
APRILIA	SR Street	05- 12	50	REAR
APRILIA	Atlantic	03-	125	REAR
APRILIA	Scarabeo, Scarabeo GT	99-	125	REAR
APRILIA	Sportcity	04- 12	125	REAR
APRILIA	RS	06- 12	125	REAR
APRILIA	Scarabeo	99-	150	REAR
APRILIA	Scarabeo, Scarabeo GT	04-	150	REAR

APRILIA	Atlantic	03-	200	REAR
APRILIA	Scarabeo	07-	200	REAR
APRILIA	Scarabeo Class	10-	200	REAR
APRILIA	Scarabeo ie	12-	200	REAR
APRILIA	Scarabeo, Scarabeo GT	02- 03	200	REAR
APRILIA	Sportcity	04- 08	200	REAR
APRILIA	Atlantic ie	07-	250	REAR
APRILIA	Leonardo	99-	250	REAR
APRILIA	Leonardo (Grimeca cal.)	99-	250	REAR
APRILIA	Scarabeo, Scarabeo ie	06-	250	REAR
APRILIA	Sportcity ie	06- 08	250	REAR
APRILIA	Scarabeo Special	10-	300	REAR
APRILIA	Scarabeo ie	07-	400	REAR
APRILIA	Atlantic Left/Rear	02- 05	500	REAR
APRILIA	Atlantic Sprint	06-	500	REAR
APRILIA	Scarabeo	03- 06	500	REAR
APRILIA	Scarabeo Class	10-	500	REAR
APRILIA	Scarabeo ie	07-	500	REAR
BETA	Eikon	04-	50	REAR
BETA	Eikon	04-	125	REAR
BETA	Eikon	04-	150	REAR
DERBI	Rambla	08-	125	REAR
DERBI	Rambla	08-	300	REAR
MALAGUTI	Phantom Max	04-	125	REAR
MALAGUTI	Sport City Cube	08-	125	REAR
MALAGUTI	F-18 Warrior	00-	125	REAR
MALAGUTI	R Madison	99-	125	REAR
MALAGUTI	Madison	99-	150	REAR
MALAGUTI	Madison	02-	180	REAR

MALAGUTI	Phantom Max	04-	200	REAR
MALAGUTI	Sport City Cube	08-	200	REAR
MALAGUTI	S Madison	03-	200	REAR
MALAGUTI	Madison	99-	250	REAR
MALAGUTI	Password	06-	250	REAR
MALAGUTI	Phantom Max	05-	250	REAR
MALAGUTI	Sport City Cube	08-	250	REAR
MALAGUTI	RS Madison	05-	250	REAR
MALAGUTI	Sport City Cube	08-	300	REAR
MALAGUTI	K Madison	02-	400	REAR
HYOSUNG	GD EXIV-R	15-	250	REAR
HYOSUNG	GT iR	15-	250	REAR
HYOSUNG	GT R	16-	300	REAR
HYOSUNG	GT iR	15-	650	REAR

Tipo / *Type* : 3021

Marca / *Brand*	**Vehículo/ Modelo *Vehicle / Model***	**Año /*Year***	**Motor / *Engine***	**Eje / *Axle***
AEON	Oz	14-	125	FRONT
AEON	Urban	14-	125	FRONT
CF MOTO	Papio	17-	125	FRONT
DAELIM	QL Steezer	17-	125	REAR
DAELIM	SV To VIN SDC007440	17-	125	REAR
DAELIM	SV S3	11-	125	REAR
DAELIM	Roadwin	04-	125	REAR
DAELIM	Roadwin	08-	250	REAR
HONDA	NS-1	92-	75	FRONT
HONDA	NSR R	93-	80	FRONT
HONDA	NSF	06-	100	FRONT

HONDA	VT C1 Shadow	99-	125	FRONT
HONDA	VT C2 Shadow	99-	125	FRONT
HONDA	XLV Varadero	01-	125	FRONT
HONDA	NSR	02-	150	FRONT
HONDA	CBF	04-	250	FRONT
HONDA	CB	10-	300	FRONT
ITALJET	Rollercraft	08-	50	REAR
ITALJET	Torpedo	08-	125	REAR
ITALJET	Torpedo	08-	150	REAR
KEEWAY	Partner	06-	100	FRONT
KEEWAY	Partner	06-	110	FRONT
KEEWAY	Speed	06-	125	REAR
KEEWAY	Speed	06-	150	REAR
KYMCO	B&W	04-	50	FRONT
KYMCO	Dink, Dink Sport, B&W	99-	50	FRONT
KYMCO	K-Pipe	12-	50	FRONT
KYMCO	New Dink	08-	50	FRONT
KYMCO	Spacer	99-	50	FRONT
KYMCO	Super-9 A/C	02-	50	FRONT
KYMCO	Super-9 L/C	02-	50	FRONT
KYMCO	Yager	01-	50	FRONT
KYMCO	Cobra Racer	99-	100	FRONT
KYMCO	Agility 16+	14-	125	REAR
KYMCO	B&W, Dink Sport	99-	125	FRONT / REAR
KYMCO	Cruiser	99-	125	FRONT
KYMCO	Dink	96-	125	FRONT / REAR
KYMCO	Grand Dink	02-	125	FRONT / REAR
KYMCO	Hipster	01-	125	FRONT
KYMCO	K-Pipe	13-	125	FRONT

KYMCO	Movie	99-	125	FRONT
KYMCO	Movie XL	01-	125	FRONT
KYMCO	New Dink	08-	125	FRONT / REAR
KYMCO	Pulsar	01-	125	FRONT
KYMCO	Quannon	08-	125	FRONT / REAR
KYMCO	Spacer	99-	125	FRONT / REAR
KYMCO	Techno GT	06-	125	FRONT
KYMCO	Yager	01-	125	FRONT / REAR
KYMCO	Yager GT	09-	125	FRONT
KYMCO	Zing	96-	125	FRONT
KYMCO	CK-1	14-	125	FRONT
KYMCO	B&W	01-	150	FRONT / REAR
KYMCO	Dink	99-	150	FRONT / REAR
KYMCO	Grand Dink	02-	150	FRONT / REAR
KYMCO	Hipster	01-	150	FRONT
KYMCO	Movie XL	01-	150	FRONT
KYMCO	Quannon	10-	150	FRONT / REAR
KYMCO	Spacer	99-	150	FRONT / REAR
KYMCO	Yager	01-	150	FRONT / REAR
KYMCO	Zing	99-	150	FRONT
KYMCO	Agility 16+	14-	200	REAR
KYMCO	Agility R16	11-	200	REAR
KYMCO	Dink	04-	200	FRONT / REAR
KYMCO	i New Dink	08-	200	FRONT / REAR
KYMCO	Like i	10-	200	FRONT / REAR
KYMCO	Yager	04-	200	FRONT / REAR
KYMCO	B&W, Dink Sport	01-	250	FRONT / REAR
KYMCO	People	03-	250	FRONT
KYMCO	Yup	03-	250	FRONT / REAR

KYMCO	People Si Right	08-	300	FRONT
LONCIN	LX 4	02-	110	FRONT
LONCIN	LX	02-	125	FRONT
SYM	RS	05-	125	REAR
SYM	RS	05-	150	REAR
TGB	Buffalo	03-	125	REAR

Tipo / *Type* : 3022

Marca / *Brand*	**Vehículo/ Modelo *Vehicle / Model***	**Año /*Year***	**Motor / *Engine***	**Eje / *Axle***
MBK	Skyliner	00-	250	REAR
YAMAHA	TW	99-	125	FRONT
YAMAHA	YP X-Max ABS	11-	125	REAR
YAMAHA	YP X-Max Business ABS	11-	125	REAR
YAMAHA	DT	00-	175	FRONT
YAMAHA	TW	01-	200	FRONT
YAMAHA	Bronco Cellow	97-	225	FRONT
YAMAHA	XT	01-	225	FRONT
YAMAHA	XG Tricker	05-	250	FRONT
YAMAHA	VP X-City	07-	250	REAR
YAMAHA	YP D Majesty DX	98-	250	REAR
YAMAHA	YP Majesty DX/ABS	99- 14	250	REAR
YAMAHA	YP X-Max	05- 13	250	REAR
YAMAHA	XT	08-	250	FRONT
YAMAHA	YZF R6	99- 02	600	REAR
YAMAHA	YZF R1	02- 03	1000	REAR

Tipo / *Type* : 3026

Marca / *Brand*	**Vehículo/ Modelo *Vehicle / Model***	**Año /*Year***	**Motor / *Engine***	**Eje / *Axle***
APRILIA	MX Cross	85	125	FRONT
APRILIA	Leonardo (Grimeca cal.)	99-	125	FRONT
APRILIA	Red Rose	89	125	FRONT
APRILIA	Scarabeo, Scarabeo GT	99-	125	FRONT
APRILIA	Sportcity	04- 12	125	FRONT
APRILIA	Leonardo (Grimeca cal.)	99-	150	FRONT
APRILIA	Scarabeo	99-	150	FRONT
APRILIA	Tuareg	- 86	125	FRONT
APRILIA	Tuareg Rally	86-	125	FRONT
APRILIA	Tuareg Rally	89	125	FRONT
APRILIA	ETX	- 86	125	FRONT
APRILIA	ETX Tuareg	86- 87	125	FRONT
APRILIA	Scarabeo, Scarabeo GT	02- 03	200	FRONT
APRILIA	Sportcity	04- 08	200	FRONT
APRILIA	Leonardo (Grimeca cal.)	99-	250	FRONT
APRILIA	Sportcity ie	06- 08	250	FRONT
APRILIA	Tuareg Rally	86-	250	FRONT
APRILIA	Leonardo (Grimeca cal.)	05-	300	FRONT
APRILIA	Tuareg	86-	350	FRONT
APRILIA	Tuareg Wind	87	350	FRONT
APRILIA	ETX		350	FRONT
APRILIA	Scarabeo ie	07-	400	FRONT
APRILIA	Atlantic Left/Rear	02- 05	500	FRONT
APRILIA	Scarabeo	03- 06	500	FRONT
APRILIA	Scarabeo Class	10-	500	FRONT
APRILIA	Scarabeo ie	07-	500	FRONT

APRILIA	Tuareg	86-	600	FRONT
APRILIA	ETX	86- 92	600	FRONT
APRILIA	NA Mana GT, ABS	09- 13	850	REAR
APRILIA	NA Mana, ABS	08- 11	850	REAR
CAGIVA	Blues	89	50	FRONT
CAGIVA	Blues	89	125	FRONT
CAGIVA	Roadster	94-	125	FRONT
CAGIVA	Roadster	96-	200	FRONT
DERBI	Rambla	08-	125	FRONT
DERBI	Rambla	08-	300	FRONT
FANTIC	Raider	85-	250	FRONT
GARELLI	Tiger XLE	86-	125	FRONT
GILERA	Cougar	99-	125	FRONT
GILERA	Fast Bike	88-	125	FRONT
GILERA	KK, KR, KZ	86-	125	FRONT
GILERA	R1, R1S	90-	125	FRONT
GILERA	ER Rally	87	125	FRONT
GILERA	MXR	90	125	FRONT
GILERA	RRT Nebraska	87	125	FRONT
GILERA	RTX	86	125	FRONT
GILERA	RX Arizona Hawk	85	125	FRONT
GILERA	X1	89	125	FRONT
GILERA	XR2	90	125	FRONT
GILERA	Arizona Hawk	85	200	FRONT
GILERA	ER	87	200	FRONT
GILERA	Fast Bike		200	FRONT
GILERA	Arizona Rally		250	FRONT
GILERA	Dakota		350	FRONT
GILERA	XRT	90-	350	FRONT

GILERA	Dakota	86	500	FRONT
GILERA	RC	88	600	FRONT
GILERA	XRT	89	600	FRONT
HONDA	CA Rebel	97-	125	FRONT
HONDA	CLR Cityfly	99- 03	125	FRONT
HONDA	CRM R	90- 98	125	FRONT
HONDA	MTX Camel, Italy	88-	125	FRONT
HONDA	MTX R, Italy	86	125	FRONT
HONDA	NS Italy	85- 88	125	FRONT
HONDA	NSR F, R	90- 92	125	FRONT
HONDA	NSR R, Italy	89-	125	FRONT
HONDA	NX Transcity	90- 98	125	FRONT
HONDA	RTV NRS, Italy	87-	125	FRONT
HONDA	XL R, P.D., Italy	85	125	FRONT
HONDA	XL R, P.D., Italy, EX	87-	125	FRONT
HONDA	XL R, P.D., Italy	85-	200	FRONT
MALAGUTI	Runner	87-	125	FRONT
MALAGUTI	Sport City Cube	08-	125	FRONT
MALAGUTI	Sport City Cube	08-	200	FRONT
MALAGUTI	Sport City Cube	08-	250	FRONT
MALAGUTI	Sport City Cube	08-	300	FRONT
MALAGUTI	GT Spidermax	04-	500	FRONT
MALAGUTI	RS Spidermax	09-	500	FRONT
MOTO-GUZZI	V7 Racer	12- 14	750	REAR
MOTO-GUZZI	V7 Stone	12- 14	750	REAR
MOTO-GUZZI	V7 II Racer	15-	750	REAR
MOTO-GUZZI	V7 II Scrambler	16-	750	REAR
MOTO-GUZZI	V7 II Special	15-	750	REAR
MOTO-GUZZI	V7 II Stone	15-	750	REAR

MOTO-GUZZI	V7 II Stornello	16-	750	REAR
MOTO-GUZZI	V7 II Stornello Ltd Edition	17-	750	REAR
MOTO-GUZZI	V7 III Anniversario	17-	750	REAR
MOTO-GUZZI	V7 III Carbon	18-	750	REAR
MOTO-GUZZI	V7 III Euro 4	17-	750	REAR
MOTO-GUZZI	V7 III Limited	19-	750	REAR
MOTO-GUZZI	V7 III Milano	18-	750	REAR
MOTO-GUZZI	V7 III Racer	17-	750	REAR
MOTO-GUZZI	V7 III Special	17-	750	REAR
MOTO-GUZZI	V7 III Stone	17-	750	REAR
MOTO-GUZZI	V85 TT	18-	850	REAR
MOTO-GUZZI	V9 Bobber	16-	850	REAR
MOTO-GUZZI	V9 Bobber Sport	19-	850	REAR
MOTO-GUZZI	V9 Roamer	16-	850	REAR
MOTO-GUZZI	V9 X-Track	17-	850	REAR
MOTO-MORINI	Excalibur	87-	350	FRONT
MOTO-MORINI	Kanguro	88	350	FRONT
MOTO-MORINI	Camel	88	501	FRONT
MOTO-MORINI	Excalibur	87	501	FRONT
SACHS	Roadster V2	01-	125	FRONT
SACHS	ZX	99-	125	FRONT
SACHS	ZZ	99-	125	FRONT
SIMSON		01-	125	FRONT
SIMSON	RS	01-	125	FRONT
SIMSON	Schikra	99-	125	FRONT

Tipo / *Type* : 3027

Marca / *Brand*	**Vehículo/ Modelo *Vehicle / Model***	**Año /*Year***	**Motor / *Engine***	**Eje / *Axle***
ALFER	VRE 4-stroke	00-	125	FRONT
ALFER	VR Cross	99-	250	FRONT
ALFER	VR Enduro	99-	250	FRONT
ALFER	VR No Limit	99-	250	FRONT
ALFER	VR Supermotard	99-	250	FRONT
APRILIA	MX	04- 07	125	FRONT
APRILIA	MX Supermoto	07-	125	FRONT
APRILIA	RX	97-	125	FRONT
APRILIA	RX Enduro	08-	125	FRONT
APRILIA	RX Supermotard	08-	125	FRONT
APRILIA	SX	08- 13	125	FRONT
APRILIA	SRV	12-	850	FRONT
APRILIA	RST Futura	01- 03	1000	REAR
BENELLI	BX Cross	07-	449	FRONT
BENELLI	BX Enduro	08-	505	FRONT
BIMOTA	DBX 1100	13-	1100	REAR
BMW	G 450 X	08- 10	450	FRONT
BMW	HP2 Enduro	04- 06	1200	REAR
BMW	HP2 Sport	08- 10	1200	REAR
BMW	K 1200 GT (K44) With	04- 08	1200	REAR
BMW	R 1200 Nine-T	14-	1200	REAR
BMW	R 1200 Nine-T Pure	17-	1200	REAR
BMW	R 1200 Nine-T Racer	17-	1200	REAR
BMW	R 1200 Nine-T Scrambler	16-	1200	REAR
BMW	R 1200 Nine-T Urban GS	17-	1200	REAR
BMW	K 1300 GT	09- 10	1300	REAR

CAGIVA	Elefant	93- 95	750	REAR
CAGIVA	Elefant	93- 97	900	FRONT / REAR
CCM	MX	08- 10	450	FRONT
CCM	GP	16-	450	FRONT
CCM	604 RS	01	600	FRONT
CCM	604E Sport	99- 01	600	FRONT
CCM	604E Supermoto	99- 01	600	FRONT
CCM	C25	96- 98	600	FRONT
CCM	DS	02- 06	644	FRONT
CCM	R30	02- 06	644	FRONT
DUCATI	Multistrada	05- 06	620	FRONT
DUCATI	Monster	07- 12	695	FRONT
DUCATI	Monster S2R	05- 07	800	FRONT
DUCATI	Monster S2R ABS	05- 07	800	FRONT
DUCATI	Multistrada	17-	950	REAR
DUCATI	Multistrada	15-	1200	REAR
DUCATI	Multistrada S	15-	1200	REAR
DUCATI	Multistrada S D-air	15-	1200	REAR
DUCATI	Multistrada S Pikes Peak	16-	1200	REAR
DUCATI	Multistrada Enduro Pro	18-	1200	REAR
DUCATI	Multistrada	18-	1260	REAR
DUCATI	Multistrada Enduro	19-	1260	REAR
DUCATI	Multistrada S	18-	1260	REAR
DUCATI	Multistrada S D-air	18-	1260	REAR
DUCATI	Multistrada S Pikes Peak	18-	1260	REAR
FACTORY	YR	99-	250	FRONT
GAS GAS	Wild HP	04-	50	FRONT / REAR
GAS GAS	EC	97- 99	125	FRONT
GAS GAS	Wild HP	08-	200	FRONT / REAR

GAS GAS	EC	99	200	FRONT
GAS GAS	EC Ranger Enduro	19-	200	FRONT
GAS GAS	Wild HP	04-	240	FRONT / REAR
GAS GAS	Wild HP	08-	250	FRONT / REAR
GAS GAS	EC	97- 99	250	FRONT
GAS GAS	MC	97- 99	250	FRONT
GAS GAS	Wild HP	03-	300	FRONT / REAR
GAS GAS	EC	99	300	FRONT
GAS GAS	EC Ranger Enduro	19-	300	FRONT
GAS GAS	Wild HP	03-	450	FRONT / REAR
GAS GAS	Wild HP	09-	515	FRONT / REAR
GILERA	Nexus	04-	500	FRONT
GILERA	GP	08-	800	FRONT
HARLEY DAVIDSON	XG Street	16-	500	REAR
HARLEY DAVIDSON	XG Street	16-	750	REAR
HIGHLAND	MX	06-	450	FRONT
HIGHLAND	V2 Motard	00-	950	FRONT
HIGHLAND	V2 Outback	99-	950	FRONT
HONDA	NX Dominator (Austria)	97-	500	FRONT
HUSABERG	all models	93- 98	125-700	FRONT
HUSABERG	TE	13	125	FRONT
HUSABERG	FE	13	250	FRONT
HUSABERG	TE	11- 13	250	FRONT
HUSABERG	TE	11- 13	300	FRONT
HUSABERG	FE	13	350	FRONT
HUSABERG	FE	10- 13	390	FRONT
HUSABERG	FC	99- 02	400	FRONT
HUSABERG	FE S,E	99- 03	400	FRONT
HUSABERG	FC	03- 08	450	FRONT

HUSABERG	FE	09- 13	450	FRONT
HUSABERG	FE e	04- 08	450	FRONT
HUSABERG	FX e	03- 08	450	FRONT
HUSABERG	FC e	01- 02	470	FRONT
HUSABERG	FX e	01- 02	470	FRONT
HUSABERG	FC	99- 01	501	FRONT
HUSABERG	FE S,E	99- 04	501	FRONT
HUSABERG	FE	13	501	FRONT
HUSABERG	FC	01- 05	550	FRONT
HUSABERG	FE e	04- 08	550	FRONT
HUSABERG	FE	09- 13	570	FRONT
HUSABERG	FC	99- 01	600	FRONT
HUSABERG	FE S,E	99- 02	600	FRONT
HUSABERG	FE e	01- 08	650	FRONT
HUSABERG	FX e	01- 05	650	FRONT
HUSQVARNA	CR	96- 13	125	FRONT
HUSQVARNA	SM S	09- 13	125	FRONT
HUSQVARNA	SM S 4T	11- 13	125	FRONT
HUSQVARNA	SM 125 Supermotard, S	99- 13	125	FRONT
HUSQVARNA	TC	14-	125	FRONT
HUSQVARNA	TE	14-	125	FRONT
HUSQVARNA	TE 4T	11- 13	125	FRONT
HUSQVARNA	TX	17-	125	FRONT
HUSQVARNA	WR	96- 13	125	FRONT
HUSQVARNA	WRE	96- 13	125	FRONT
HUSQVARNA	CR	96- 05	250	FRONT
HUSQVARNA	FC	14-	250	FRONT
HUSQVARNA	FE	14-	250	FRONT
HUSQVARNA	TC	02- 13	250	FRONT

HUSQVARNA	TC	14-	250	FRONT
HUSQVARNA	TE	02- 13	250	FRONT
HUSQVARNA	TE	14-	250	FRONT
HUSQVARNA	TE 4T	10- 13	250	FRONT
HUSQVARNA	WR	96- 13	250	FRONT
HUSQVARNA	TC	14-	300	FRONT
HUSQVARNA	TE	14-	300	FRONT
HUSQVARNA	WR	09- 13	300	FRONT
HUSQVARNA	TE 4T	10- 13	310	FRONT
HUSQVARNA	FC	14-	350	FRONT
HUSQVARNA	FE	14-	350	FRONT
HUSQVARNA	TE	96- 13	350	FRONT
HUSQVARNA	WR	98- 13	360	FRONT
HUSQVARNA	TE	01- 13	400	FRONT
HUSQVARNA	TE	96- 13	410	FRONT
HUSQVARNA	TC	11- 13	449	FRONT
HUSQVARNA	TE	11- 13	449	FRONT
HUSQVARNA	FC	14-	450	FRONT
HUSQVARNA	FE	14-	450	FRONT
HUSQVARNA	TC	02- 10	450	FRONT
HUSQVARNA	TE	02- 10	450	FRONT
HUSQVARNA	FE	14-	501	FRONT
HUSQVARNA	TC	02- 10	510	FRONT
HUSQVARNA	TE	02- 10	510	FRONT
HUSQVARNA	TE Centennial	04- 05	510	FRONT
HUSQVARNA	TE	11- 13	511	FRONT
HUSQVARNA	TE	14-	511	FRONT
HUSQVARNA	TC	01- 13	570	FRONT
HUSQVARNA	TE	01- 13	570	FRONT

HUSQVARNA	TC	96- 13	610	FRONT
HUSQVARNA	TE Rallye	96- 13	610	FRONT
HUSQVARNA	TE	10- 13	630	FRONT
HUSQVARNA	TE	14-	630	FRONT
KRAM-IT	GS	97-	250	FRONT
KRAM-IT	MX	97-	250	FRONT
KRAM-IT	SM	97-	250	FRONT
KTM	most models	94-	125-700	FRONT
KTM	SuperMoto	00-	125	FRONT
KTM	EXC Enduro	99-16	125	FRONT
KTM	EXE	00	125	FRONT
KTM	GS	92- 97	125	FRONT
KTM	LC2	99-	125	FRONT
KTM	MX	92- 93	125	FRONT
KTM	SX	96-	125	FRONT
KTM	XC-W	17-	125	FRONT
KTM	SX	07- 08	144	FRONT
KTM	EXC TPI	20-	150	FRONT
KTM	SX	09-	150	FRONT
KTM	XC-W	17-19	150	FRONT
KTM	EXC Enduro	99-	200	FRONT
KTM	SX	03- 04	200	FRONT
KTM	EXC Enduro	99-18	250	FRONT
KTM	EXC Enduro 4T	99- 06	250	FRONT
KTM	EXC TPI	19-	250	FRONT
KTM	EXC-F Enduro	07-	250	FRONT
KTM	MX	92- 93	250	FRONT
KTM	SX	96-	250	FRONT
KTM	SX-F	06-	250	FRONT

KTM	EXC	93- 96	300	FRONT
KTM	EXC Enduro	99-18	300	FRONT
KTM	EXC TPI	19-	300	FRONT
KTM	MX	92-	300	FRONT
KTM	EXC-F	11-	350	FRONT
KTM	SX-F	11-	350	FRONT
KTM	MX	96- 97	360	FRONT
KTM	SX	96- 97	360	FRONT
KTM	XC	96- 97	360	FRONT
KTM	EXC Enduro	99	380	FRONT
KTM	MX	98-	380	FRONT
KTM	SX	98- 02	380	FRONT
KTM	XC	98-	380	FRONT
KTM	EXC Racing	00-	400	FRONT
KTM	LC4	93- 02	400	FRONT
KTM	LC4-E Enduro	99- 02	400	FRONT
KTM	SC	99-	400	FRONT
KTM	SX Racing	00- 02	400	FRONT
KTM	SXC Tiainen Replica	99- 00	400	FRONT
KTM	EXC Racing	04-	450	FRONT
KTM	SX-F	03-	450	FRONT
KTM	XC-F	06-	450	FRONT
KTM	MX	92- 93	500	FRONT
KTM	SX Racing	07-	505	FRONT
KTM	XC-F	08- 09	505	FRONT
KTM	EXC Racing	00- 02	520	FRONT
KTM	SX-F Racing	00- 02	520	FRONT
KTM	EXC Racing	03-	525	FRONT
KTM	SX-F Racing	03- 06	525	FRONT

KTM	EXC Racing	08-	530	FRONT
KTM	SXC Tiainen Replica	99- 00	540	FRONT
KTM	LC4 Six Days	92-	600	FRONT
KTM	LC4 Competition	99-	620	FRONT
KTM	LC4 Competition SuperMoto	00-	620	FRONT
KTM	LC4 RXC	95	620	FRONT
KTM	LC4 Supercompetition	01-	620	FRONT
KTM	SC	99-	620	FRONT
KTM	SX	95- 99	620	FRONT
KTM	LC4 SC Supermoto	02- 04	625	FRONT
KTM	SXC	03- 04	625	FRONT
KTM	LC4 Adventure	99- 04	640	FRONT
KTM	LC4-E Enduro	99-	640	FRONT
KTM	LC4-E Supermoto	99- 02	640	FRONT
KTM	LC4 Rallye	01- 03	660	FRONT
KTM	R Superenduro	06- 08	950	REAR
KTM	SM	05-	950	REAR
KTM	SM R	07-	950	REAR
KTM	Adventure R	10-	990	REAR
KTM	Adventure, Adventure S, ABS	06- 11	990	REAR
KTM	Supermoto	07- 11	990	REAR
KTM	Supermoto R	10-	990	REAR
KTM	Supermoto T	09-	990	REAR
KTM	Adventure	15-	1050	REAR
KTM	Super Adventure	17-	1090	REAR
KTM	Super Adventure R	17-	1090	REAR
KTM	Adventure	13-	1190	REAR
KTM	Super Adventure	15- 16	1290	REAR
KTM	Super Adventure R	17-	1290	REAR

KTM	Super Adventure S	17-	1290	REAR
KTM	Super Adventure T	17-	1290	REAR
MAICO	Motocross / Enduro	99-	250	FRONT
MAICO	Motocross / Enduro	99-	500	FRONT
MAICO	Supermotard	99-	500	FRONT
MBK	XQ Thunder	01-	125	FRONT
MBK	YP Skyliner	99-	125	FRONT
MBK	Skyliner	01-	150	FRONT
MBK	XQ Thunder	02-	150	FRONT
MBK	Skyliner	04-	180	FRONT
MBK	Kilibre	03-	300	FRONT / REAR
MOTO-GUZZI	ES Quota	99-	1100	REAR
MOTO-GUZZI	V Breva, ABS	05- 07	1100	REAR
MOTO-GUZZI	Griso 8V	07-	1200	REAR
MOTO-GUZZI	Norge	06-	1200	REAR
MOTO-GUZZI	Norge GT 8V	10-	1200	REAR
MOTO-GUZZI	Sport	07- 08	1200	REAR
MOTO-GUZZI	Sport 8V	12-	1200	REAR
MOTO-GUZZI	Sport 8V SE	12-	1200	REAR
MOTO-GUZZI	Stelvio	08- 11	1200	REAR
MOTO-GUZZI	Stelvio 8V SE	12-	1200	REAR
MOTO-GUZZI	Stelvio NTX	09- 11	1200	REAR
MOTO-GUZZI	V Breva	08-	1200	REAR
MOTO-MORINI	Granferro	10-	1200	REAR
MOTO-MORINI	Granpasso	08-	1200	REAR
MOTO-MORINI	GT	10-	1200	REAR
MOTO-MORINI	Scrambler	09-	1200	REAR
PIAGGIO	X9 Evolution	04-	500	FRONT
PIAGGIO	X9 Evolution ABS	04-	500	FRONT

PRAGA	ED	99-	250	FRONT
PRAGA	CD	99-	610	FRONT
RIEJU	MRX Marathon	10-	250	FRONT
RIEJU	MRX Marathon	08-	450	FRONT
ROYAL ENFIELD	Himalayan	19-	411	FRONT
ROYAL ENFIELD	Classic	19-	500	FRONT
ROYAL ENFIELD	Continental GT650	19-	648	FRONT
ROYAL ENFIELD	Interceptor 650	19-	648	FRONT
SHERCO	SE-R	17-	125	FRONT
SHERCO	SE-R Motard	20-	125	FRONT
SHERCO	SE ,R	14-	250	FRONT
SHERCO	SE 2.5i Enduro	06- 11	250	FRONT
SHERCO	SE F, F-R	14-	250	FRONT
SHERCO	SE i/iR	12- 13	250	FRONT
SHERCO	SE i-F	13	250	FRONT
SHERCO	SX 2.5i-F	09- 11	250	FRONT
SHERCO	SCF-R	16-	300	FRONT
SHERCO	SE ,R	14-	300	FRONT
SHERCO	SE 3.0i-F	10- 11	300	FRONT
SHERCO	SE F, F-R	14-	300	FRONT
SHERCO	SE i/iR	12- 13	300	FRONT
SHERCO	SE i-F	13	300	FRONT
SHERCO	SE 4.5i Enduro	04- 11	450	FRONT
SHERCO	SE F, F-R	14-	450	FRONT
SHERCO	SE iR	12- 13	450	FRONT
SHERCO	SE 5.1i Enduro	06- 11	510	FRONT
SHERCO	SE iR	12- 13	510	FRONT
SUZUKI	UH Burgman	02- 06	125	FRONT
SUZUKI	UH Burgman	04- 06	150	FRONT

SWM	RS R	15-	300	FRONT
SWM	RS R	15-	500	FRONT
TM	Cross	96- 00	80	FRONT
TM		01- 12	85	FRONT
TM		96-	125	FRONT
TM	Enduro	01- 20	125	FRONT
TM	Enduro Fi (Fuel Injection 2Stroke)	20-	125	FRONT
TM		01-	250	FRONT
TM	E	95- 00	250	FRONT
TM	Enduro	19	250	FRONT
TM	Enduro Fi (Fuel Injection 2Stroke)	19	250	FRONT
TM	F	01-	250	FRONT
TM	F Enduro	00	250	FRONT
TM	F Enduro	01-	250	FRONT
TM		98- 00	300	FRONT
TM	MX	01-	300	FRONT
TM	MX Fi 4T	17-	300	FRONT
TM	Enduro	01-	300	FRONT
TM	Enduro Fi (Fuel Injection 2Stroke)	19	300	FRONT
TM	Enduro Fi 4T	17-	300	FRONT
TM	FT 2T	17-	300	FRONT
TM		96- 97	320	FRONT
TM	F	00- 01	400	FRONT
TM	F Enduro	01	400	FRONT
TM	F	02-	450	FRONT
TM	F Enduro	02-	450	FRONT
TM	FT Fi	17-	450	FRONT
TM	F	01-	530	FRONT
TM	F Enduro	01-	530	FRONT

TM	FT Fi	17-	530	FRONT
TRIUMPH	Tiger XCA	18-	800	FRONT
TRIUMPH	Tiger XCX	18-	800	FRONT
TRIUMPH	Tiger XRT	18-	800	FRONT
TRIUMPH	Tiger XRX	18-	800	FRONT
TRIUMPH	Tiger XRX Low	18-	800	FRONT
TRIUMPH	Bonneliville Bobber Black	18-	1200	FRONT
TRIUMPH	Speedmaster	18-	1200	FRONT
VERTEMATI	C Cross	02- 04	500	FRONT
VERTEMATI	E Enduro	02- 04	501	FRONT
VERTEMATI	S Supermotard	02- 04	501	FRONT
VOR	Cross	00- 01	400	FRONT
VOR	Enduro	00- 01	400	FRONT
VOR	EN	02-	400	FRONT
VOR	MX	02	400	FRONT
VOR	EN	02-	450	FRONT
VOR	MX	02-	450	FRONT
VOR	492 Enduro	99	500	FRONT
VOR	495 Cross	99	500	FRONT
VOR	EN	02-	530	FRONT
VOR	MX	02-	530	FRONT
WRM	MX	06-	450	FRONT
YAMAHA	XQ Maxter	01-	125	FRONT
YAMAHA	YP Majesty	01-	125	FRONT
YAMAHA	YP R Majesty	99- 00	125	FRONT
YAMAHA	YZF R	08- 13	125	FRONT
YAMAHA	XQ Maxter	01-	150	FRONT
YAMAHA	YP Majesty	01-	150	FRONT
YAMAHA	FZH Fazer	11-	150	FRONT

YAMAHA	YP R Majesty	03-	180	FRONT
YAMAHA	VP Versity	03- 04	300	FRONT / REAR
YAMAHA	VP Versity	05- 06	300	REAR
YAMAHA	TT E,S	96- 01	600	FRONT
YAMAHA	TT R	93- 95	600	FRONT
YAMAHA	TT R	98- 07	600	FRONT
YAMAHA	XT Z Tenere	08- 14	660	FRONT
YAMAHA	XT Z Tenere ABS	11- 14	660	FRONT
YAMAHA	XTZ Tenere	19-	700	FRONT
ZERO	FX ZF2.8	15	ELETRIC	FRONT
ZERO	FX ZF5.7	15	ELETRIC	FRONT

Tipo / *Type* : 3030

Marca / *Brand*	**Vehículo/ Modelo *Vehicle / Model***	**Año /*Year***	**Motor / *Engine***	**Eje / *Axle***
APRILIA	RS-4 (J.Juan cal.)	11-	125	FRONT
APRILIA	RS	95- 96	250	FRONT
BETA	Jonathan	99-	125	FRONT
BETA	4.0 Motard	04-	350	FRONT
BETA	Euro	99-	350	FRONT
BETA	Jonathan	02-	350	FRONT
BETA	M4 (Brembo cal.)	06-	350	FRONT
BIMOTA	YB7	89	400	FRONT
BIMOTA	Vdue	97- 00	500	FRONT
BIMOTA	Bellaria	91-	600	FRONT
BIMOTA	YB8 Furano	92-	600	FRONT
BIMOTA	YB9 SRI	97-	600	FRONT
BIMOTA	BB1 Supermono	97- 00	650	FRONT
BIMOTA	SB7	96-	750	FRONT

BIMOTA	YB4	89	750	FRONT
BIMOTA	1D Tesi	91-	851	FRONT
BIMOTA	DB2	92- 00	900	FRONT
BIMOTA	DB3 Mantra	97- 00	900	FRONT
BIMOTA	1D Tesi	91-	900	FRONT
BIMOTA	2D Tesi	04- 06	1000	FRONT
BIMOTA	YB11	97-	1000	FRONT
BIMOTA	YB6	89	1000	FRONT
BIMOTA	YB8	90	1000	FRONT
BIMOTA	YB10 Dieci	91-	1000	FRONT
BIMOTA	SB6	97- 00	1100	FRONT
BORILE	B CR, MT	02-	500	FRONT
CAGIVA	Mito	93-	125	FRONT
CAGIVA	SP 525 Mito	08- 10	125	FRONT
CAGIVA	Planet	97- 07	125	FRONT
CAGIVA	Raptor	03- 10	125	FRONT
CAGIVA	Mito	07	500	FRONT
CAGIVA	River	00-	500	FRONT
CAGIVA	River	94- 99	600	FRONT
CANNONDALE	S (Motard)	03	440	FRONT
DUCATI	SS, Junior	92- 97	400	FRONT
DUCATI	SS, Nuda	92-	400	FRONT
DUCATI	Single	93	502	FRONT
DUCATI	Supermono	93	502	FRONT
DUCATI	SS Supersport	95- 00	600	FRONT
DUCATI	M Monster	94- 99	600	FRONT
DUCATI	Biposto	95- 98	748	FRONT
DUCATI	SP	95- 97	748	FRONT
DUCATI	Monster	96- 99	750	FRONT

DUCATI	SS	91-	750	FRONT
DUCATI	SS Supersport	95- 99	750	FRONT
DUCATI	SS, Carenara	92-	750	FRONT
DUCATI	SS, Nuda	92	750	FRONT
DUCATI	Super Sport	92- 94	750	FRONT
DUCATI	Strada	89	851	FRONT
DUCATI	Strada	91-	851	FRONT
DUCATI	Superbike	90	851	FRONT
DUCATI	Roche Replica	91-	888	FRONT
DUCATI	SP V	93	888	FRONT
DUCATI	SP4	92- 95	888	FRONT
DUCATI	SPO		888	FRONT
DUCATI	SPS	92- 95	888	FRONT
DUCATI	Strada	93	888	FRONT
DUCATI	Superbike	93	888	FRONT
DUCATI	FE	97-	900	FRONT
DUCATI	M, IL Monster	93- 99	900	FRONT
DUCATI	SL	92- 97	900	FRONT
DUCATI	SS	90- 94	900	FRONT
DUCATI	SS Supersport	95- 97	900	FRONT
DUCATI	SSR	92	900	FRONT
DUCATI	907 I. E.	90- 93	900	FRONT
DUCATI	M Street Monster	94- 99	900	FRONT
DUCATI	Biposto	94-	916	FRONT
FANTIC	TZ SM	12-	125	FRONT
GAS GAS	SM	02-	125	FRONT
GAS GAS	SM	02-	250	FRONT
GAS GAS	FSE SM	02	400	FRONT
GAS GAS	FSE SM	03- 06	450	FRONT

GAS GAS	FSR SM	07-	450	FRONT
GILERA	Saturno Bialbero	90	350	FRONT
GILERA	Saturno Bialbero	90	500	FRONT
GILERA	Saturno Piuma	90	600	FRONT
HONDA	RS	95-	125	FRONT
HONDA	RS R	93-	250	FRONT
HUSQVARNA	SM R	02	400	FRONT
HUSQVARNA	SM R	03- 04	450	FRONT
HUSQVARNA	SM R	01-	570	FRONT
INDIAN	Chief Blackhawk	11- 13	1700	FRONT
INDIAN	Chief Bomber	10- 13	1700	FRONT
INDIAN	Chief Classic	10- 13	1700	FRONT
INDIAN	Chief Dark Horse	10- 13	1700	FRONT
INDIAN	Chief Deluxe	09- 13	1700	FRONT
INDIAN	Chief Roadmaster	09- 13	1700	FRONT
INDIAN	Chief Standard	09- 13	1700	FRONT
INDIAN	Chief Vintage	09- 13	1700	FRONT
ITALJET	Grifon	00-	900	FRONT
KTM	Sting	99-	125	FRONT
KTM	SX SM Factory Replica	04-	450	FRONT
KTM	Duke	93- 95	600	FRONT
KTM	Duke	96- 98	620	FRONT
KTM	Duke	99- 02	640	FRONT
KTM	LC4 Supermoto	03	640	FRONT
KTM	LC4 SM Factory Replica	02-	660	FRONT
KTM	SMC Supermoto	03	660	FRONT
LAVERDA		92-	650	FRONT
LAVERDA		96-	668	FRONT
LAVERDA	Ghost, Diamante	97-	668	FRONT

LAVERDA	Cup	98-	750	FRONT
LAVERDA	Diamante	97-	750	FRONT
LAVERDA	Ghost Strike	97-	750	FRONT
LAVERDA	S Formula	97- 01	750	FRONT
LAVERDA	S, S Carenata	97-	750	FRONT
LAVERDA	Sport	99-	750	FRONT
LAVERDA	Strike/Black Strike	99-	750	FRONT
LAVERDA	T8	98-	750	FRONT
LAVERDA	TTS	99-	800	FRONT
LAVERDA	JOTA	95	1000	FRONT
MOTO-GUZZI	Ippogrifo	97-	740	FRONT
MOTO-GUZZI	Daytona	91-	1000	FRONT
MOTO-GUZZI	Quota	92	1000	FRONT
MOTO-GUZZI	RS Daytona	97- 00	1000	FRONT
MOTO-GUZZI	V10 Centauro	96- 00	1000	FRONT
MOTO-GUZZI	California Jackal	00	1100	FRONT
MOTO-GUZZI	California Jackal Basic	00	1100	FRONT
MOTO-GUZZI	California Special	99- 00	1100	FRONT
MOTO-GUZZI	Sport	96-	1100	FRONT
MOTO-GUZZI	EV California	97- 00	1100	FRONT
MOTO-GUZZI	V11 Sport	97- 00	1100	FRONT
MZ	(MUZ) Skorpion Cup	99-	660	FRONT
MZ	(MUZ) Skorpion Replica	97-	660	FRONT
MZ	(MUZ) Skorpion Sport	95-	660	FRONT
MZ	(MUZ) Skorpion Tour	95-	660	FRONT
MZ	(MUZ) Skorpion Traveller	99-	660	FRONT
NORTON	F-1	90	588 Rotary	FRONT
NORTON	TT	92-	588 Rotary	FRONT
PGO	G-Max	06-	250	FRONT

SACHS	X-Road	05-	125	FRONT
SACHS	XTC	99-	125	FRONT
SACHS	XTC-N	99-	125	FRONT
SACHS	MadAss	05-	500	FRONT
SACHS	Roadster V1.6	01-	650	FRONT
SACHS	B-805	02-	800	FRONT
SACHS	Roadster V2	00-	800	FRONT
SACHS	S-805	03-	800	FRONT
TM	SMM	05- 06	125	FRONT
TM	SMR	05- 07	125	FRONT
TM	SMF F	02	400	FRONT
TM	SMR F	03	400	FRONT
TM	SMM F	05- 06	450	FRONT
TM	SMR F	04- 07	450	FRONT
TM	SMX F	03	450	FRONT
TM	SMM F	05- 06	530	FRONT
TM	SMR F	03- 07	530	FRONT
TM	SMX F	03	600	FRONT
VOR	SM	02	400	FRONT
VOR	SM	02-	450	FRONT
VOR	492 Super Motard	00- 01	500	FRONT
VOR	SM	02-	530	FRONT
VOXAN	Cafe Racer	01- 06	1000	FRONT
VOXAN	Roadster	01- 06	1000	FRONT
YAMAHA	TZR R	94	250	FRONT
YAMAHA	SZR	96- 01	660	FRONT

Tipo / *Type* : 3031

Marca / *Brand*	**Vehículo/ Modelo *Vehicle / Model***	**Año /*Year***	**Motor / *Engine***	**Eje / *Axle***
ALFER	MC	88	125	FRONT
ALFER	GR Enduro	88	250	FRONT
ALFER	MC	88	250	FRONT
ALFER	GR Enduro	88	300	FRONT
APRILIA	Sport Pro.	92	125	FRONT
APRILIA	Tuono	04- 07	125	FRONT
APRILIA	AF1 Europa, Futura	90- 92	125	FRONT
APRILIA	AF1 Replica, Sintesi	89- 91	125	FRONT
APRILIA	RS Extrema	93- 98	125 ,	FRONT
APRILIA	RS	99- 05	125	FRONT
APRILIA	RS Pista	05-	125	FRONT
APRILIA	AF1 Replica	90-	250	FRONT
ASPES	Sintesi	88-	125	FRONT
ATK	ATK CC,MX	91- 92	250	FRONT
ATK	ATK ES CC,MX, STD	91- 92	350	FRONT
ATK	ATK CC,MX	91- 92	406	FRONT
ATK	ATK	89- 91	560	FRONT
ATK	ATK	91-	604	FRONT
ATK	ATK ES CC,MX, STD	91- 92	604	FRONT
ATK	ATK Quadracer	90-	604	FRONT
BENELLI	Devil	92	50	FRONT
BENELLI	Spring	92	50	FRONT
BENELLI	Jarno	89	125	FRONT
BENELLI	BX	89	125	FRONT
GILERA	SP01	90	125	FRONT
GILERA	Crono	92-	125	FRONT

GILERA	Freestyle	92-	125	FRONT
GILERA	MX1, MRX	90-	125	FRONT
GILERA	SP02	90-	125	FRONT
GILERA	CX	91-	125	FRONT
GILERA	Nordwest	91-	600	FRONT
KTM	MX VC, Enduro	87-	250	FRONT / REAR
KTM	EXC	87	350	FRONT / REAR
KTM	GS	87	350	FRONT / REAR
KTM	MX	87	350	FRONT / REAR
KTM	Enduro	87-	400	FRONT / REAR
KTM	MX	87	500	FRONT / REAR
KTM	LC4	87-	550	FRONT / REAR
KTM	MX	87-	550	FRONT / REAR
KTM	EXC	87	600	FRONT / REAR
KTM	LC4	88-	600	FRONT / REAR
KTM	LC4 Enduro	88-	600	FRONT / REAR
KTM	MC	88	600	FRONT / REAR
KTM	MX	87	600	FRONT / REAR

Tipo / *Type* : 3034

Marca / *Brand*	**Vehículo/ Modelo *Vehicle / Model***	**Año /*Year***	**Motor / *Engine***	**Eje / *Axle***
HONDA	NHX	08- 09	110	FRONT
HONDA	SCV Lead	08- 09	110	FRONT
HONDA	CH Spacy	94-	125	FRONT
HONDA	PS i	07- 13	125	FRONT
HONDA	SES Dylan	02- 07	125	FRONT
HONDA	SH	02- 08	125	FRONT
HONDA	PS i	07- 11	150	FRONT
HONDA	SES Dylan	02- 06	150	FRONT
HONDA	SH	02- 08	150	FRONT
SUZUKI	Sky Wave Type II	98-	250	REAR
SUZUKI	AN Burgman	98- 03	250	REAR
SUZUKI	AN Burgman	99- 00	400	REAR
YAMAHA	YFZ S Left/Rear	06- 09	450	REAR
YAMAHA	YFM Raptor	13-	700	REAR

Tipo / *Type* : 3035

Marca / *Brand*	**Vehículo/ Modelo *Vehicle / Model***	**Año /*Year***	**Motor / *Engine***	**Eje / *Axle***
APRILIA	RS	06-	50	FRONT
APRILIA	Blue Marlin	02	1000	REAR
APRILIA	ETV Caponord	01- 08	1000	REAR
APRILIA	ETV Caponord Rally Raid	04- 08	1000	REAR
APRILIA	RSV Factory Pista (Rad.cal)	04-	1000	REAR
APRILIA	RSV Falco SL, R	00- 04	1000 ,	REAR
APRILIA	RSV Mille	97- 03	1000	REAR
APRILIA	RSV Mille Nera (Rad.cal)	04-	1000	REAR

APRILIA	RSV Mille R	00- 04	1000	REAR
APRILIA	RSV Mille R (Rad.cal)	03	1000	REAR
APRILIA	RSV Mille R (Rad.cal)	05-	1000	REAR
APRILIA	RSV Mille R Factory (Rad.cal)	04-	1000	REAR
APRILIA	RSV Mille SP	00	1000	REAR
APRILIA	RSV Tuono Fighter	03- 05	1000	REAR
APRILIA	RSV Tuono R	03	1000	REAR
APRILIA	RSV Tuono R (Rad.cal) ABS	04-	1000	REAR
APRILIA	RSV Tuono R Factory ABS	06-	1000	REAR
APRILIA	RSV Tuono V4 R	11-	1000	REAR
APRILIA	RSV4 ABS	09-	1000	REAR
APRILIA	RSV4-R ABS APRC	10-	1000	REAR
APRILIA	RSV4-RF	15-	1000	REAR
APRILIA	RSV4-RR	15-	1000	REAR
APRILIA	RSV Tuono V4	15-	1100	REAR
APRILIA	RSV Tuono V4 Factory	16-	1100	REAR
APRILIA	RSV Tuono V4 RR	15-	1100	REAR
BENELLI	BN	14	302	REAR
BENELLI	Leoncino	16-	500	REAR
BENELLI	TRK	16-	502	REAR
BENELLI	BN	12-	600	REAR
BENELLI	BN GT	14-	600	REAR
BENELLI	Due	07-	756	REAR
BENELLI	Trek	07-	899	REAR
BENELLI	TnT	07-	899	REAR
BENELLI	TnT Century Racer	11-	899	REAR
BENELLI	Tornado TRE	03- 06	900	REAR
BENELLI	Tornado TRE RS (Rad.cal)	04- 06	900	REAR
BENELLI	TnT	05-	1130	REAR

BENELLI	TnT Cafe Racer	05-	1130	REAR
BENELLI	TnT Century Racer	11-	1130	REAR
BENELLI	TnT Officine	07-	1130	REAR
BENELLI	TnT R	17-	1130	REAR
BENELLI	TnT Sport	05-	1130	REAR
BENELLI	TnT Titanium	05-	1130	REAR
BENELLI	TnT Trek	06-	1130	REAR
BENELLI	TnT Trek Amazonas	07-	1130	REAR
BIMOTA	3D Tesi	16-	800	REAR
BIMOTA	BB3	14-	1000	REAR
BIMOTA	DB5 Mille (Rad.cal)	05- 11	1000	REAR
BIMOTA	DB5 S (Rad.cal)	07- 11	1000	REAR
BIMOTA	DB6 Delirio (Rad.cal)	07-	1000	REAR
BIMOTA	H2 Supercharged	20	1000	REAR
BIMOTA	DB10 Bimotard	12-	1078	REAR
BIMOTA	DB5 RE	12-	1078	REAR
BIMOTA	DB7 (Rad.cal)	08	1098	REAR
BIMOTA	3D Tesi (Rad.cal)	07-	1100	REAR
BIMOTA	DB6R Delirio (Rad.cal)	08-	1100	REAR
BIMOTA	DB8 (Rad.cal)	10-	1198	REAR
BIMOTA	Impeto	16-	1200	REAR
BIMOTA	DB11 VLX (Rad.cal)	13-	1200	REAR
BIMOTA	DB12	12-	1200	REAR
BIMOTA	DB9 Brivido	12-	1200	REAR
BOMBARDIER	500 Traxter 4x4	99- 00	500	FRONT / REAR
BRAMMO	Empulse	14- 16	ELETRIC	REAR
CAGIVA	Raptor	01-	650	REAR
CAGIVA	V-Raptor	01-	650	REAR
CAGIVA	Raptor	00-	1000	REAR

CAGIVA	V-Raptor	00-	1000	REAR
CAGIVA	X3 Raptor	04-	1000	REAR
CAGIVA	X-Raptor	03-	1000	REAR
CAGIVA	Xtra Raptor	02-	1000	REAR
CPI	GTR	03-	50	FRONT
CPI	X-Large	02-	125	FRONT / REAR
CPI	X-Large	02-	200	FRONT / REAR
DERBI	GP1	05-	50	FRONT
DERBI	GPR Nude	04-	50	FRONT
DERBI	GPR Racing	04-	50	FRONT
DERBI	Senda DRD Pro SM	05-	50	FRONT
DERBI	Senda DRD SM	10-	125	FRONT
DERBI	GP1	05-	125	FRONT
DERBI	GP1	05-	250	FRONT
DERBI	Mulhacen	05- 07	659	REAR
DERBI	Mulhacen Cafe	08-	659	REAR
DUCATI	Multistrada	05- 06	620	REAR
DUCATI	Multistrada Dark	05- 06	620	REAR
DUCATI	Sport	03- 06	620	REAR
DUCATI	Monster (Rad.cal)	08- 12	696	REAR
DUCATI	S	03- 07	749	REAR
DUCATI	R (Rad.cal)	04- 07	749	REAR
DUCATI	Sport	00- 02	750	REAR
DUCATI	Super Sport	00- 02	750	REAR
DUCATI	Monster	12-	795	REAR
DUCATI	Hypermotard ABS	10- 12	796	REAR
DUCATI	Monster (Rad.cal)	11- 14	796	REAR
DUCATI	Monster ABS (Rad.cal)	11- 14	796	REAR
DUCATI	Hypermotard	13- 15	821	REAR

DUCATI	Hypermotard ABS	13- 15	821	REAR
DUCATI	Hypermotard SP	13- 15	821	REAR
DUCATI	Hypermotard SP ABS	13- 15	821	REAR
DUCATI	Hyperstrada	13- 15	821	REAR
DUCATI	Hyperstrada ABS	13- 15	821	REAR
DUCATI	Sport	03- 06	821	REAR
DUCATI	Supersport	03- 06	821	REAR
DUCATI	Monster	15-	821	REAR
DUCATI	Monster Dark	15-	821	REAR
DUCATI	(Rad.cal)	08- 10	848	REAR
DUCATI	EVO (Rad.cal)	11- 12	848	REAR
DUCATI	Streetfighter	12-	848	REAR
DUCATI	Streetfighter S	12-	848	REAR
DUCATI	Panigale	14- 15	899	REAR
DUCATI	Super Sport	98- 02	900	REAR
DUCATI	Sport Touring 4	99- 01	916	REAR
DUCATI	Hypermotard	16- 18	939	REAR
DUCATI	Hypermotard SP	16- 18	939	REAR
DUCATI	Hyperstrada	16-	939	REAR
DUCATI	SuperSport	17-	939	REAR
DUCATI	SuperSport S	17-	939	REAR
DUCATI	Sport Touring	98-	944	REAR
DUCATI	ST2	97-	944	REAR
DUCATI	Hypermotard	19-	950	REAR
DUCATI	Hypermotard	19-	950	REAR
DUCATI	Panigale V2	20-	955	REAR
DUCATI	Panigale	16-19	959	REAR
DUCATI	Panigale Corse	16-18	959	REAR
DUCATI	D16RR Desmosedici RR	07- 08	990	REAR

DUCATI	ST3	04-	992	REAR
DUCATI	ST3s ABS	06-	992	REAR
DUCATI	ST4s	02- 06	996	REAR
DUCATI	ST4s ABS	03- 06	996	REAR
DUCATI	Monster S4Rs	06	998	REAR
DUCATI	S	03- 07	999	REAR
DUCATI	Monster S4R	07-	999	REAR
DUCATI	Monster S4RS	07-	999	REAR
DUCATI	R (Rad.cal)	03- 07	999	REAR
DUCATI	Hypermotard	06	1000	REAR
DUCATI	Monster S2R	06- 07	1000	REAR
DUCATI	Multistrada	07-	1000	REAR
DUCATI	Multistrada DS	03- 06	1000	REAR
DUCATI	Multistrada S DS	05-	1000	REAR
DUCATI	Supersport DS	03- 06	1000	REAR
DUCATI	Panigale V4 R	19-	1000	REAR
DUCATI	1098 (Rad. cal)	07- 08	1098	REAR
DUCATI	1098 R (Rad.cal)	08-	1098	REAR
DUCATI	1098 R Bayliss LE (Rad.cal)	09-	1098	REAR
DUCATI	1098 S (Rad. cal)	07- 08	1098	REAR
DUCATI	Streetfighter 1098 (Rad.cal)	09-	1098	REAR
DUCATI	Streetfighter 1098 S (Rad.cal)	09-	1098	REAR
DUCATI	Hypermotard 1100	07-	1100	REAR
DUCATI	Hypermotard EVO 1100	10-	1100	REAR
DUCATI	Hypermotard EVO 1100 SP	10-	1100	REAR
DUCATI	Monster (Rad.cal)	09-	1100	REAR
DUCATI	Monster ABS (Rad.cal)	09-	1100	REAR
DUCATI	Monster EVO (Rad.cal)	11-	1100	REAR
DUCATI	Monster EVO ABS (Rad.cal)	11-	1100	REAR

DUCATI	Monster S (Rad.cal)	09-	1100	REAR
DUCATI	Monster S ABS (Rad.cal)	09-	1100	REAR
DUCATI	Multistrada	07- 09	1100	REAR
DUCATI	Multistrada S	07- 09	1100	REAR
DUCATI	Panigale V4	18-	1100	REAR
DUCATI	Panigale V4 S	18-	1100	REAR
DUCATI	Panigale V4 S Corse	19-	1100	REAR
DUCATI	Panigale V4 Speciale	18-	1100	REAR
DUCATI	Streetfighter V4	20-	1100	REAR
DUCATI	Streetfighter V4 S	20-	1100	REAR
DUCATI	1198 (Rad.cal)	09-	1198	REAR
DUCATI	1198 S (Rad.cal)	09-	1198	REAR
DUCATI	1198 SP (Rad.cal)	11-	1198	REAR
DUCATI	Panigale	12- 14	1199	REAR
DUCATI	Panigale R	13-	1199	REAR
DUCATI	Panigale S	12- 14	1199	REAR
DUCATI	Superleggera	14-	1199	REAR
DUCATI	Monster	14- 16	1200	REAR
DUCATI	Monster	17-	1200	REAR
DUCATI	Monster R	16-	1200	REAR
DUCATI	Monster S	14-	1200	REAR
DUCATI	Monster 25 Anniversario	17-	1200	REAR
DUCATI	Multistrada	10- 14	1200	REAR
DUCATI	Multistrada S GT	12- 14	1200	REAR
DUCATI	Multistrada S Pikes Peak	11- 14	1200	REAR
DUCATI	Multistrada S Sport	10- 14	1200	REAR
DUCATI	Multistrada S Touring	10- 14	1200	REAR
DUCATI	Panigale	15-	1299	REAR
DUCATI	Panigale R	15-	1299	REAR

DUCATI	Panigale R Final Edition	17-	1299	REAR
DUCATI	Panigale S	15-	1299	REAR
DUCATI	Panigale S Anniversario	17-	1299	REAR
DUCATI	Superleggera	17-	1299	REAR
GILERA	Nexus	04-	500	REAR
GILERA	Supersport	02-	600	REAR
HARLEY DAVIDSON	Life Wire	19-	ELETRIC	REAR
HONDA	RC213V-S	16-	1000	REAR
HONDA	CBR Fireblade RR+R	20-	1000	REAR
HONDA	CBR Fireblade RR+R SP	20-	1000	REAR
HOREX	VR6 Cafe Racer	17-	1200	REAR
HOREX	VR6 Classic	17-	1200	REAR
KAWASAKI	H2 Carbon Ninja	17-	1000	REAR
KAWASAKI	H2 Ninja	15-	1000	REAR
KAWASAKI	H2R Ninja	15-	1000	REAR
KTM	RC8	08-	1190	REAR
KTM	RC8 R	09-	1190	REAR
KTM	RC8 R Track	11-	1190	REAR
KTM	Super Duke GT	16-	1290	REAR
KTM	Super Duke R	14-	1290	REAR
LAVERDA	TTS	99-	800	REAR
LAVERDA	SFC (Rad.cal)	04-	1000	REAR
MALAGUTI	Madison 3	08-	125	REAR
MALAGUTI	Madison 3 ie	08-	250	REAR
MALAGUTI	GT Spidermax	04-	500	REAR
MALAGUTI	RS Spidermax	09-	500	REAR
MBK	Skycruiser	06-	125	REAR
MBK	XQ Thunder	01-	125	REAR
MBK	YP Skyliner	01-	125	REAR

MBK	Skyliner	01-	150	REAR
MBK	XQ Thunder	02-	150	REAR
MBK	Skyliner	04-	180	REAR
MONDIAL	EVO (Rad.cal)	04-	1000	REAR
MONDIAL	Piega	03-	1000	REAR
MONDIAL	RZ Nuda	04-	1000	REAR
MONDIAL	Starfighter (Rad.cal)	04-	1000	REAR
MOTO-GUZZI	Breva	03-	750	REAR
MOTO-GUZZI	Nevada Classic ie	06-	750	REAR
MOTO-GUZZI	Nevada, Nevada Club	03-	750	REAR
MOTO-GUZZI	V7 Cafe Classic	10-	750	REAR
MOTO-GUZZI	V7 Classic	09- 12	750	REAR
MOTO-GUZZI	V7 Clubman Racer	10-	750	REAR
MOTO-GUZZI	V7 Racer	11	750	REAR
MOTO-GUZZI	V Breva	04	1100	REAR
MOTO-GUZZI	MGS-01 Corsa (Rad.cal)	05-	1200	REAR
MOTO-GUZZI	Sport 4V	09- 11	1200	REAR
MOTO-MORINI	9,5	06- 09	1200	REAR
MOTO-MORINI	Corsaro	06- 13	1200	REAR
MOTO-MORINI	Sport	08-	1200	REAR
MV AGUSTA	Brutale	12-	675	REAR
MV AGUSTA	F3	11-	675	REAR
MV AGUSTA	F3 RC	16-	675	REAR
MV AGUSTA	Brutale	13-	800	REAR
MV AGUSTA	Brutale Dragster	15-	800	REAR
MV AGUSTA	Brutale Dragster RC	17- 18	800	REAR
MV AGUSTA	Brutale Dragster RR	15-	800	REAR
MV AGUSTA	Brutale Dragster RR LH44	18-	800	REAR
MV AGUSTA	Brutale Dragster RR Pirelli	18-	800	REAR

MV AGUSTA	Brutale RC	18-	800	REAR
MV AGUSTA	Brutale RR	15-	800	REAR
MV AGUSTA	F3	14-	800	REAR
MV AGUSTA	F3 RC	16-	800	REAR
MV AGUSTA	Rivale	13-	800	REAR
MV AGUSTA	RVS#1	18-	800	REAR
MV AGUSTA	Superveloce	19-	800	REAR
MV AGUSTA	Stradale	15-	800	REAR
MV AGUSTA	Turismo Veloce	14-	800	REAR
MV AGUSTA	Turismo Veloce Lusso	14-	800	REAR
MV AGUSTA	Turismo Veloce RC	17-	800	REAR
NORTON	Commando Cafe Racer	11- 17	961	REAR
NORTON	Commando Cafe Racer MK II	18-	961	REAR
NORTON	Commando SE	10- 14	961	REAR
NORTON	Commando SF	13- 15	961	REAR
NORTON	Commando SF Sport	11- 15	961	REAR
NORTON	Dominator Naked	17-	961	REAR
NORTON	V4 RR	18-	1200	REAR
PEUGEOT	CityStar	14-	50	REAR
PEUGEOT	Speedfight 3 (LC)	10-	50	REAR
PEUGEOT	Speedfight 3 RS (LC)	10-	50	REAR
PEUGEOT	Speedfight 4 (LC)	15-	50	REAR
PEUGEOT	Active	13-	125	REAR
PEUGEOT	CityStar	11-	125	REAR
PEUGEOT	Django Heritage	14-	125	REAR
PEUGEOT	Django Heritage	14-	150	REAR
PEUGEOT	CityStar	13-	200	REAR
PEUGEOT	Satelis	06	500	FRONT / REAR
PIAGGIO	X8	04	125	REAR

PIAGGIO	X9	01- 03	125	FRONT / REAR
PIAGGIO	X9 Evolution Left/Rear	06-	125	REAR
PIAGGIO	X9 Left/Rear	04-	125	REAR
PIAGGIO	X9	02-	180	FRONT / REAR
PIAGGIO	X8	04	200	REAR
PIAGGIO	X9	03-	200	FRONT / REAR
PIAGGIO	X9	00- 04	250	FRONT / REAR
PIAGGIO	Beverly Cruiser	08-	500	FRONT / REAR
PIAGGIO	X9	01- 03	500	FRONT / REAR
PIAGGIO	X9 Evolution	04-	500	REAR
PIAGGIO	X9 Evolution ABS	04-	500	REAR
PIAGGIO	BV	06-	500	FRONT / REAR
RIEJU	MRT Pro	09-	50	FRONT / REAR
RIEJU	MRT Pro Supermotard	09-	50	FRONT / REAR
RIEJU	SMX Pro	08-	50	FRONT
RIEJU	Tango	08-	50	FRONT
RIEJU	Tangoo	10-	50	FRONT
RIEJU	Marathon Pro	09-	125	FRONT
RIEJU	Marathon Pro Supermotard	09-	125	FRONT
RIEJU	Tango	08-	125	FRONT
RIEJU	Tango Pro	08-	125	FRONT
RIEJU	Tango	08-	250	FRONT
SUZUKI	UH Burgman	02- 06	125	REAR
SUZUKI	UH Burgman	04- 06	150	REAR
VICTORY	Empulse TT	16-	ELETRIC	REAR
VOXAN	Cafe Racer	01- 06	1000	REAR
VOXAN	Roadster	01- 06	1000	REAR
VOXAN	VB1 EVO	04-	1000	REAR
YAMAHA	VP X-City	08-	125	REAR

YAMAHA	XQ Maxter	01-	125	REAR
YAMAHA	YP Majesty	01-	125	REAR
YAMAHA	YP X-Max	06-	125	REAR
YAMAHA	YP X-Max Sport Ed.	11-	125	REAR
YAMAHA	XQ Maxter	01-	150	REAR
YAMAHA	YP Majesty	01-	150	REAR
YAMAHA	YP R Majesty	04-	180	REAR

Tipo / *Type* : 3038

Marca / *Brand*	**Vehículo/ Modelo *Vehicle / Model***	**Año /*Year***	**Motor / *Engine***	**Eje / *Axle***
MICROCAR	Microcar	/	500	FRONT
MICROCAR	Grecav Eike	/	505	FRONT

Tipo / *Type* : 3041

Marca / *Brand*	**Vehículo/ Modelo *Vehicle / Model***	**Año /*Year***	**Motor / *Engine***	**Eje / *Axle***
APRILIA	Sport City One	08-	50	FRONT
APRILIA	SR Max	12-	125	FRONT / REAR
APRILIA	SR Sport City One	12-	125	FRONT
APRILIA	SR Max	12-	300	FRONT / REAR
APRILIA	SRV	12-	850	REAR
DERBI	Boulevard	09-	50	FRONT
GILERA	Runner PJ	06-	50	FRONT
GILERA	Runner SP	06-	50	FRONT
GILERA	Nexus	07-	125	FRONT / REAR
GILERA	FX Runner (Hengtong cal.)	00-	125	FRONT
GILERA	FX Runner SP (Hengtong cal.)	00-	125	FRONT
GILERA	ST Runner	08-	125	FRONT

GILERA	VX Runner 4T (Hengtong cal.)	01-	125	FRONT
GILERA	FXR Runner (Hengtong cal.)	00-	180	FRONT
GILERA	FXR Runner SP (Hengtong	00-	180	FRONT
GILERA	VXR Runner	01-	180	FRONT
GILERA	VXR Runner 4T (Hengtong	01-	180	FRONT
GILERA	ST Runner	08-	200	FRONT
GILERA	VXR Runner 4T (Hengtong	01-	200	FRONT
GILERA	Nexus	07-	250	FRONT / REAR
GILERA	GP	08-	800	FRONT
PEUGEOT	CityStar	14-	50	FRONT
PEUGEOT	Active	13-	125	FRONT
PEUGEOT	CityStar	11-	125	FRONT
PEUGEOT	Geopolis	06-	125	FRONT
PEUGEOT	RS Geopolis	10-	125	FRONT
PEUGEOT	CityStar	13-	200	FRONT
PEUGEOT	Geopolis	06-	250	FRONT / REAR
PEUGEOT	Satelis	06-	250	FRONT / REAR
PIAGGIO	Fly	05-	50	FRONT
PIAGGIO	Primavera	14-	50	FRONT
PIAGGIO	Sprint	15-	50	FRONT
PIAGGIO	TPH 2T	11-	50	FRONT
PIAGGIO	Fly	07-	100	FRONT
PIAGGIO	Zip	07-	100	FRONT
PIAGGIO	946	14-	125	FRONT
PIAGGIO	Beverly	02- 03	125	FRONT / REAR
PIAGGIO	Carnaby	08-	125	FRONT / REAR
PIAGGIO	Fly	05-	125	FRONT
PIAGGIO	Primavera	14-	125	FRONT
PIAGGIO	Primavera 70	16-	125	FRONT

PIAGGIO	Sprint	16-	125	FRONT
PIAGGIO	Sprint S	17-	125	FRONT
PIAGGIO	Sprint Sport	17-	125	FRONT
PIAGGIO	X10 Executive Left/Rear	13-	125	FRONT
PIAGGIO	X7	08-	125	FRONT
PIAGGIO	X8	04-	125	FRONT
PIAGGIO	X9 Evolution Left/Rear	06-	125	FRONT
PIAGGIO	X9 Left/Rear	04-	125	FRONT
PIAGGIO	Xevo	08-	125	FRONT
PIAGGIO	GT L	04-	125	FRONT
PIAGGIO	GTS	07-	125	FRONT
PIAGGIO	GTS Super	10- 13	125	FRONT
PIAGGIO	GTS Super i.e.	15-	125	FRONT
PIAGGIO	GTS Supersport	13	125	FRONT
PIAGGIO	GTS Touring	18-	125	FRONT
PIAGGIO	GTV	08-	125	FRONT
PIAGGIO	GTX SuperHexagon	00-	125	FRONT
PIAGGIO	GTX SuperHexagon	01-	125	FRONT
PIAGGIO	Fly	06-	150	FRONT
PIAGGIO	Primavera	14-	150	FRONT
PIAGGIO	X8 Street	06-	150	FRONT
PIAGGIO	GTX SuperHexagon	00-	180	FRONT
PIAGGIO	GTX SuperHexagon	01-	180	FRONT
PIAGGIO	Beverly	02-	200	FRONT / REAR
PIAGGIO	Carnaby	08-	200	FRONT / REAR
PIAGGIO	X8	04-	200	FRONT
PIAGGIO	BV	02- 04	200	FRONT / REAR
PIAGGIO	BV	05-	200	FRONT
PIAGGIO	GT L	04-	200	FRONT

PIAGGIO	Beverly	07-	250	FRONT / REAR
PIAGGIO	GT 60	06-	250	FRONT
PIAGGIO	X7	08-	250	FRONT
PIAGGIO	X8	06-	250	FRONT
PIAGGIO	X9 Left/Rear	05-	250	FRONT
PIAGGIO	Xevo	08-	250	FRONT
PIAGGIO	BV	06-	250	FRONT / REAR
PIAGGIO	GTS ABS	06-	250	FRONT
PIAGGIO	GTV	08-	250	FRONT
PIAGGIO	Beverly i.e.	11-	300	FRONT
PIAGGIO	Beverly Tourer	07-	300	FRONT / REAR
PIAGGIO	Carnaby Cruiser	10-	300	FRONT / REAR
PIAGGIO	X7 Evo i.e.	11-	300	FRONT
PIAGGIO	GTS i.e.	12-	300	FRONT
PIAGGIO	GTS Super	09-	300	FRONT
PIAGGIO	GTS Super Sport i.e.	11-	300	FRONT
PIAGGIO	GTS Super Notte	19-	300	FRONT
PIAGGIO	GTS Touring ABS	17-	300	FRONT
PIAGGIO	GTS Touring i.e.	11- 12	300	FRONT
PIAGGIO	GTV i.e.	11-	300	FRONT
PIAGGIO	Beverly S	14-	350	FRONT
PIAGGIO	Beverly Sport Touring ie ABS	12-	350	FRONT
PIAGGIO	X10 Executive Left/Rear	13-	350	FRONT
PIAGGIO	BV	12-	350	FRONT
PIAGGIO	MP3 iE	07- 10	400	REAR
PIAGGIO	MP3 LT iE	09- 10	400	REAR
PIAGGIO	MP3 LT Touring	11- 12	400	REAR
PIAGGIO	MP3 Touring	11- 12	400	REAR
PIAGGIO	X8 Left/Rear	07-	400	FRONT / REAR

PIAGGIO	Xevo Left/Rear	08-	400	FRONT / REAR
PIAGGIO	MP3	10-	500	REAR
PIAGGIO	MP3 LT Touring Business	11- 13	500	REAR
PIAGGIO	MP3 LT Touring Business	14-	500	REAR
PIAGGIO	MP3 LT Touring Sport	11- 13	500	REAR
PIAGGIO	MP3 LT Touring Sport ABS	14-	500	REAR
PIAGGIO	MP3 Touring Business	11- 12	500	REAR
PIAGGIO	MP3 Touring Sport	11- 12	500	REAR
PIAGGIO	X10 Executive Left/Rear	13-	500	FRONT

Tipo / *Type* : 3043

Marca / *Brand*	**Vehículo/ Modelo *Vehicle / Model***	**Año /*Year***	**Motor / *Engine***	**Eje / *Axle***
ITALJET	Jupiter	01-	250	REAR
KEEWAY	TX SM	10-	50	FRONT
RIEJU	NKD	04- 07	50	FRONT
RIEJU	RS2 Matrix	03-	50	FRONT
RIEJU	RS3	12-	50	FRONT

Tipo / *Type* : 3047

Marca / *Brand*	**Vehículo/ Modelo *Vehicle / Model***	**Año /*Year***	**Motor / *Engine***	**Eje / *Axle***
KAWASAKI	SC Epsilon	02-	250	REAR
SUZUKI	AN Burgman	04- 06	250	REAR
SUZUKI	AN Burgman	01- 06	400	REAR

Tipo / *Type* : 3052

Marca / *Brand*	**Vehículo/ Modelo *Vehicle / Model***	**Año /*Year***	**Motor / *Engine***	**Eje / *Axle***
HONDA	CB N	78-	250	FRONT
HONDA	CB NA, NB,T, TZ	77-	250	FRONT
HONDA	CB RS	80- 84	250	FRONT
HONDA	CM TB	81-	250	FRONT
HONDA	CB A	77- 81	400	FRONT
HONDA	CB N, T, Hawk	78-	400	FRONT
HONDA	CB T1, T2	77- 78	400	FRONT
HONDA	CM A, T, TZ	79-	400	FRONT
HONDA	CM T	79- 81	400	FRONT
HONDA	CB	79- 81	650	FRONT
HONDA	CB C	80-	650	FRONT
HONDA	CB Z	78- 81	650	FRONT
HONDA	CB C	80- 81	750	FRONT
HONDA	CB K,L	79-	750	FRONT
HONDA	CB PZ	81-	750	FRONT
HYOSUNG	GT Comet	02	250	REAR
HYOSUNG	Comet	02	600	REAR
KAWASAKI	Z	78- 80	250	REAR
KAWASAKI	Z J	81-	250	REAR
KAWASAKI	ZX-4	90	400	REAR
KAWASAKI	ZXR	89- 90	400	REAR
KAWASAKI	ZXR	91- 02	400	REAR
KAWASAKI	R, Ninja	89-	600	REAR
KAWASAKI	ZX-7R Ninja	89- 03	750	REAR
KAWASAKI	ZXR R	89- 95	750	REAR
KAWASAKI	ZRX	96- 00	1100	REAR

KAWASAKI	ZX	93- 97	1100	REAR
KAWASAKI	ZZR	94- 01	1100	REAR
KAWASAKI	ZRX	01-	1200	REAR
KAWASAKI	ZRX R	01-	1200	REAR
KAWASAKI	ZRX S	01-	1200	REAR
KAWASAKI	ZX-12R Ninja	00- 03	1200	REAR
KAWASAKI	ZX-12R Ninja (Rad.cal)	04- 06	1200	REAR
KAWASAKI	ZZR	02-	1200	REAR
SUZUKI	RG Wolf	92- 94	125	REAR
SUZUKI	Across	90-	250	REAR
SUZUKI	Bandit	90- 96	250	REAR
SUZUKI	Cobra	90-	250	REAR
SUZUKI	Wolf	90-	250	REAR
SUZUKI	GF	88-	250	REAR
SUZUKI	GSX S, Katana	91-	250	REAR
SUZUKI	GSX-R	88- 89	250	REAR
SUZUKI	GSX-R R	89-	250	REAR
SUZUKI	RG	83- 84	250	FRONT / REAR
SUZUKI	RG Gamma	84- 88	250	REAR
SUZUKI	RGV	88	250	REAR
SUZUKI	RGV	89- 90	250	REAR
SUZUKI	TV	88	250	REAR
SUZUKI	Goose	92-	350	REAR
SUZUKI	GSF Bandit	91-97	400	REAR
SUZUKI	GSX F	89-	400	REAR
SUZUKI	GSX FWS	83	400	FRONT / REAR
SUZUKI	GSX Impulse	94- 96	400	REAR
SUZUKI	GSX S, Katana	92-	400	REAR
SUZUKI	GSX X	86-	400	REAR

SUZUKI	GSX-R	87	400	REAR
SUZUKI	GSX-R F	85- 86	400	REAR
SUZUKI	GSX-R R	90- 95	400	REAR
SUZUKI	RF RVC	93- 97	400	REAR
SUZUKI	GS	89- 03	500	REAR
SUZUKI	GS	04-	500	REAR
SUZUKI	GS F	04-	500	REAR
SUZUKI	GSX	83-	500	FRONT / REAR
SUZUKI	RG	85- 87	500	REAR
SUZUKI	RG Gamma	85-	500	REAR
SUZUKI	GS	83-	550	FRONT / REAR
SUZUKI	GSX	83- 87	550	FRONT / REAR
SUZUKI	GSF Bandit	95- 99	600	REAR
SUZUKI	GSF Bandit /S Bandit	00- 04	600	REAR
SUZUKI	GSX FW Left	98-	600	REAR
SUZUKI	GSX Katana	88- 89	600	REAR
SUZUKI	GSX Katana	90- 97	600	REAR
SUZUKI	GSX-R	92- 03	600	REAR
SUZUKI	RF R	93- 96	600	REAR
SUZUKI	SV S Left/Rear	99- 02	650	REAR
SUZUKI	GS Katana	85-	750	FRONT / REAR
SUZUKI	GS RF	85-	750	REAR
SUZUKI	GSX ES	84- 85	750	FRONT / REAR
SUZUKI	GSX FWS Left/Rear	98- 02	750	REAR
SUZUKI	GSX Katana	89- 96	750	REAR
SUZUKI	GSX Left/Rear	98- 08	750	REAR
SUZUKI	GSX-R	85- 87	750	REAR
SUZUKI	GSX-R	88	750	REAR
SUZUKI	GSX-R	88- 99	750	REAR

SUZUKI	GSX-R Y	00- 03	750	REAR
SUZUKI	TL RW	98- 02	1000	REAR
SUZUKI	TL S V-Twin	97- 01	1000	REAR
SUZUKI	GSX	86-	1100	FRONT / REAR
SUZUKI	GSX F	93- 96	1100	REAR
SUZUKI	GSX G Left/Rear	96-	1100	REAR
SUZUKI	GSX Katana	93-	1100	REAR
SUZUKI	GSX-R	86- 88	1100	REAR
SUZUKI	GSX-R	89- 97	1100	REAR
SUZUKI	GSF Bandit	95- 05	1200	REAR
SUZUKI	GSF S Bandit	01- 05	1200	REAR
SUZUKI	GSX	99- 01	1200	REAR
SUZUKI	GSX-R Hayabusa	99- 07	1300	REAR

Tipo / *Type* : 3053

Marca / *Brand*	**Vehículo/ Modelo *Vehicle / Model***	**Año /*Year***	**Motor / *Engine***	**Eje / *Axle***
YAMAHA	FJ L, LC	84-	100	FRONT / REAR
YAMAHA	TZR	89- 92	125	FRONT
YAMAHA	TZR	93- 94	125	REAR
YAMAHA	FZ Phazer N, S	85- 86	250	FRONT
YAMAHA	RD LC	83-	250	REAR
YAMAHA	YD S	90	250	FRONT
YAMAHA	RD LC YPVS	83- 84	350	REAR
YAMAHA	RZ	84- 85	350	REAR
YAMAHA	FZ N	87-	400	FRONT
YAMAHA	FZR	87-	400	FRONT
YAMAHA	XJR R	95-	400	REAR
YAMAHA	XS Z	83-	400	FRONT / REAR
YAMAHA	FZR (Austria)	89	500	FRONT / REAR
YAMAHA	FZR R (Austria)	90- 91	500	REAR
YAMAHA	RD	83-	500	FRONT / REAR
YAMAHA	RD LC	84- 86	500	FRONT
YAMAHA	RZ	84- 86	500	FRONT
YAMAHA	FJ	84-	600	FRONT / REAR
YAMAHA	FZ	86- 87	600	FRONT / REAR
YAMAHA	FZ S, SC	86-	600	REAR
YAMAHA	FZR	89	600	FRONT / REAR
YAMAHA	FZR R	90- 95	600	REAR
YAMAHA	XJ	83- 91	600	FRONT / REAR
YAMAHA	YX Radian	87- 90	600	FRONT
YAMAHA	YZF R Thunder Cat	96- 03	600	REAR
YAMAHA	FZ	87-	700	FRONT / REAR

YAMAHA	FZX Fazer	87-	700	FRONT / REAR
YAMAHA	XJ	86-	700	FRONT
YAMAHA	XJ Maxim	85-	700	FRONT / REAR
YAMAHA	XV L,LC	84-	700	FRONT
YAMAHA	XV Virago	87-	700	FRONT
YAMAHA	Maxim	81	750	REAR
YAMAHA	FZ	85- 86	750	FRONT / REAR
YAMAHA	FZ Genesis	86	750	FRONT
YAMAHA	FZ Genesis	87- 88	750	FRONT / REAR
YAMAHA	FZ Genesis	89- 92	750	REAR
YAMAHA	FZR R	89- 92	750	REAR
YAMAHA	FZR R Genesis	87- 88	750	REAR
YAMAHA	FZX Fazer	86- 90	750	FRONT / REAR
YAMAHA	TX A	73- 76	750	REAR
YAMAHA	VF Virago	88-	750	FRONT
YAMAHA	XJ	83-	750	FRONT / REAR
YAMAHA	XV	89- 92	750	FRONT
YAMAHA	YZF R, SP	93- 97	750	REAR
YAMAHA	TDM	91- 01	850	REAR
YAMAHA	TRX (Italy)	95-	850	REAR
YAMAHA	TRX	95- 00	850	REAR
YAMAHA	XJ	83-	900	FRONT / REAR
YAMAHA	XJ F	85- 93	900	FRONT / REAR
YAMAHA	XJ S, Diversion	94- 03	900	REAR
YAMAHA	XV Virago	81-	920	REAR
YAMAHA	FZR	94- 95	1000	REAR
YAMAHA	FZR EX UP	90- 93	1000	REAR
YAMAHA	FZR Genesis	87- 89	1000	REAR
YAMAHA	GTS	93- 99	1000	REAR

YAMAHA	XV L, C	84-	1000	FRONT / REAR
YAMAHA	XV Virago	86-	1000	FRONT
YAMAHA	YZF R Thunder Ace	96- 99	1000	REAR
YAMAHA	BT Bulldog	02- 06	1100	REAR
YAMAHA	FJ	83- 85	1100	FRONT / REAR
YAMAHA	XV Virago	86- 93	1100	FRONT
YAMAHA	XV Virago	99	1100	REAR
YAMAHA	XVS Drag Star	99- 06	1100	REAR
YAMAHA	XVS Drag Star Classic	00- 06	1100	REAR
YAMAHA	FJ	86- 87	1200	FRONT / REAR
YAMAHA	FJ	88- 90	1200	REAR
YAMAHA	FJ ABS	91- 93	1200	REAR
YAMAHA	V-MAX	85- 89	1200	FRONT / REAR
YAMAHA	V-MAX	90- 92	1200	FRONT / REAR
YAMAHA	V-MAX	93- 03	1200	REAR
YAMAHA	XJR (Italy)	95- 98	1200	REAR
YAMAHA	XJR	94- 98	1200	REAR
YAMAHA	XJR SP	97- 98	1200	REAR
YAMAHA	XV	84-	1200	FRONT / REAR
YAMAHA	XV Venture Royale	85	1200	FRONT / REAR
YAMAHA	XV Z12T	84-	1200	FRONT / REAR
YAMAHA	XVT T, Vent. Royale	84-	1200	FRONT / REAR
YAMAHA	XJR	99- 01	1300	REAR
YAMAHA	XJR SP	01	1300	REAR

Tipo / *Type* : 3054

Marca / *Brand*	**Vehículo/ Modelo *Vehicle / Model***	**Año /*Year***	**Motor / *Engine***	**Eje / *Axle***
KAWASAKI	Z A1-A2	79-80	250	REAR
KAWASAKI	Z A3	81-	250	REAR
KAWASAKI	Z JI	81-	250	REAR
KAWASAKI	ZZR GT (ZX1100 D)	93-	1100	REAR

Tipo / *Type* : 3058

Marca / *Brand*	**Vehículo/ Modelo *Vehicle / Model***	**Año /*Year***	**Motor / *Engine***	**Eje / *Axle***
YAMAHA	XP TMAX	01- 03	500	REAR
YAMAHA	XP TMAX	12-	530	REAR
YAMAHA	XP TMAX DX	17-	530	REAR
YAMAHA	XP TMAX Iron Max	15-	530	REAR
YAMAHA	XP TMAX SX	17-	530	REAR

Tipo / *Type* : 3059

Marca / *Brand*	**Vehículo/ Modelo *Vehicle / Model***	**Año /*Year***	**Motor / *Engine***	**Eje / *Axle***
BMW	C Evolution	12-	ELETRIC	FRONT / REAR
BMW	C Sport	12- 15	600	FRONT / REAR
BMW	C GT	12- 15	650	FRONT / REAR
BMW	C GT	16-	650	FRONT / REAR
BMW	C Sport	16-	650	FRONT / REAR
BUELL	Blast	01- 09	500	FRONT
CAGIVA	Gran Canyon	99- 04	900	FRONT
CAGIVA	Navigator, T	00- 05	1000	FRONT
DAELIM	S2	06-	125	FRONT

DAELIM	S2	06-	250	FRONT
HONDA	NSS Forza	15-	125	FRONT
HONDA	SH	13-	125	FRONT
HONDA	SH	13-	150	FRONT
HONDA	CN Helix (Fusion)	93-	250	FRONT
HONDA	SH i SH30	15-	300	FRONT
HONDA	RS R	91- 94	125	FRONT
HONDA	Steed	93-	250	FRONT
HONDA	CB	92- 05	250	FRONT
HONDA	CBR Nighthawk	92-	250	FRONT
HONDA	CBR R (Nissin cal)	11- 13	250	FRONT
HONDA	CBR R, RR	90	250	FRONT
HONDA	CBR RJ	88	250	FRONT
HONDA	VT Spada	89	250	FRONT
HONDA	CB-1 (CB 400 F)	89- 90	400	FRONT
HONDA	CBR RR	87- 89	400	FRONT
HONDA	FJS Silverwing	06- 08	400	REAR
HONDA	SW-T	09- 13	400	REAR
HONDA	SW-T ABS	09-	400	REAR
HONDA	NV Steed	92- 93	400	FRONT
HONDA	CB	94- 96	500	FRONT
HONDA	Steed	92-	600	FRONT
HONDA	CB Hornet	98- 12	600	FRONT
HONDA	CB Hornet S	00- 03	600	FRONT
HONDA	CBF N	04- 11	600	FRONT
HONDA	CBF S	04- 11	600	FRONT
HONDA	CBR F	11-	600	FRONT
HONDA	CBR F3	95- 98	600	FRONT
HONDA	FJS Silverwing	01-	600	REAR

HONDA	SW-T	11- 13	600	REAR
HONDA	VT C, Shadow	94- 00	600	FRONT
HONDA	VT CD Shadow VLX	94- 00	600	FRONT
HONDA	FMX	05- 08	650	FRONT
HONDA	NT Hawk GT	88- 91	650	FRONT
HONDA	NTV Revere	88- 93	650	FRONT
HONDA	NC S	12- 13	700	FRONT
HONDA	NC X	12- 13	700	FRONT
HONDA	VFR F Interceptor	88- 89	700	FRONT
HONDA	CB N, F, Seven Fifty	92- 95	750	FRONT
HONDA	VFR F	88- 98	750	FRONT
HONDA	PC Pacific Coast	89- 97	800	FRONT
HONDA	VFR F, Carat	92-	950	FRONT
HONDA	CBR F	89- 92	1000	FRONT
HONDA	VFR	89	1000	FRONT
HONDA	ST	90- 02	1100	FRONT
HONDA	ST ABS-TCS	92- 95	1100	FRONT
HONDA	VT C Shadow	94- 96	1100	FRONT
HONDA	VT C2 Shadow A.C.E.	95-	1100	FRONT
HONDA	VT C2 Y	00-	1100	FRONT
HONDA	VT C3 Shadow Aero	98-	1100	FRONT
HONDA	VT T Shadow	98-	1100	FRONT
HONDA	VT CX A Fury	10- 12	1300	FRONT
HONDA	VTX C	04- 09	1300	FRONT
HONDA	VTX S	03- 07	1300	FRONT
HONDA	GL F6 C Valkyrie	96- 02	1500	FRONT
HYOSUNG	V2	99-	125	FRONT
HYOSUNG	Aquila	00-	250	FRONT
KAWASAKI	J	16-	125	FRONT

KAWASAKI	Versys-X	17-	250	FRONT
KAWASAKI	J	14-	300	FRONT
KAWASAKI	KLE Versys-X	17-	300	FRONT
KAWASAKI	KLE Versys	15-	650	FRONT
KAWASAKI	KLE Versys LT	15-	650	FRONT
KAWASAKI	EX Ninja ABS	17	650	FRONT
KAWASAKI	Z ABS	17-	650	FRONT
KAWASAKI	Z ABS	07- 12	750	FRONT
KAWASAKI	Z e	13-	800	FRONT
KYMCO	Downtown i	10-	125	FRONT
KYMCO	G-Dink	12-	125	FRONT
KYMCO	Super Dink	10-	125	FRONT
KYMCO	Downtown i	10-	200	FRONT
KYMCO	Venox	01-	250	FRONT / REAR
KYMCO	Xciting	04- 05	250	FRONT / REAR
KYMCO	Xciting	06-	250	FRONT
KYMCO	Downtown i	10-	300	FRONT
KYMCO	G-Dink	12-	300	FRONT
KYMCO	People Gti	10-	300	FRONT
KYMCO	Xciting Ri	08-	300	FRONT
KYMCO	Xciting	04-	500	FRONT
KYMCO	Xciting i Evo ABS	11-	500	FRONT
KYMCO	Xciting R ABS	09-	500	FRONT
KYMCO	MyRoad, ABS	09-	700	FRONT
MASH	Scrambler	13-	400	FRONT
MASH	Five Hundred	13-	500	FRONT
PEUGEOT	Satelis ABS	04-	125	FRONT
PEUGEOT	Geopolis GT	14-	300	FRONT
PEUGEOT	Geopolis GT	14-	400	FRONT

PEUGEOT	Geopolis RS	08-	400	FRONT
PEUGEOT	Satelis i	14-	400	FRONT
PEUGEOT	Satelis	07-	500	FRONT
PEUGEOT	Satelis ABS	04-	600	FRONT
SUZUKI	Impulse	95	250	FRONT
SUZUKI	DL V-Strom	17-	250	FRONT
SUZUKI	GSX-R	17-	250	FRONT
SUZUKI	GW Inazuma	12-	250	FRONT
SUZUKI	GW Inazuma F	15-	250	FRONT
SUZUKI	GSX Impulse	94- 96	400	FRONT
SUZUKI	RF RVC	93- 97	400	FRONT
SUZUKI	GSF Bandit	95- 99	600	FRONT
SUZUKI	RF R	93- 96	600	FRONT
SUZUKI	AN A Burgman Executive	04- 12	650	FRONT
SUZUKI	AN Burgman	02-	650	FRONT
SUZUKI	AN Z Burgman Executive	13-	650	FRONT
SUZUKI	C T Intruder	13-	1500	FRONT
SWM	Gran Turismo	15-	440	FRONT
SWM	Silver Vase	15-	440	FRONT
SWM	Six Days	18-	440	FRONT
TRIUMPH	Street Triple S A2	17-	660	FRONT
TRIUMPH	Street Triple	08-	675	FRONT
TRIUMPH	Street Triple S	17-	765	FRONT
TRIUMPH	America	03- 06	800	FRONT
TRIUMPH	Bonneville	01- 04	800	FRONT
TRIUMPH	Bonneville America	02-	800	FRONT
TRIUMPH	Bonneville T100 Centennial	02- 04	800	FRONT
TRIUMPH	Bonneville T100 Paul Smith	06- 08	800	FRONT
TRIUMPH	Speedmaster	03- 04	800	FRONT

TRIUMPH	Tiger	11- 14	800	FRONT
TRIUMPH	Tiger XC	11-	800	FRONT
TRIUMPH	Tiger XC ABS	12- 14	800	FRONT
TRIUMPH	Tiger XCA	15-	800	FRONT
TRIUMPH	Tiger XCR	15-	800	FRONT
TRIUMPH	Tiger XR	15- 17	800	FRONT
TRIUMPH	Tiger XR	18-	800	FRONT
TRIUMPH	Tiger XRT	15-	800	FRONT
TRIUMPH	Tiger XRX	15-	800	FRONT
TRIUMPH	Adventurer	96-	900	FRONT
TRIUMPH	America	07-	900	FRONT
TRIUMPH	Bonneville	05-	900	FRONT
TRIUMPH	Bonneville Newchurch	15-	900	FRONT
TRIUMPH	Bonneville SE	09- 13	900	FRONT
TRIUMPH	Bonneville Spirit	15-	900	FRONT
TRIUMPH	Bonneville Street Cup	17-	900	FRONT
TRIUMPH	Bonneville T100	05- 16	900	FRONT
TRIUMPH	Bonneville T100	17-	900	FRONT
TRIUMPH	Bonneville T100 Black	17-	900	FRONT
TRIUMPH	Bonneville T214	15-	900	FRONT
TRIUMPH	Legend TT	99-	900	FRONT
TRIUMPH	Scrambler	06- 16	900	FRONT
TRIUMPH	Speedmaster	05-	900	FRONT
TRIUMPH	Street Scrambler	17- 18	900	FRONT
TRIUMPH	Street Twin	16-	900	FRONT
TRIUMPH	Thruxton	04-	900	FRONT
TRIUMPH	Thruxton Ace	15	900	FRONT
TRIUMPH	Thunderbird	96-	900	FRONT
TRIUMPH	Thunderbird Sport	03-	900	FRONT

TRIUMPH	Tiger	99- 00	900	FRONT
TRIUMPH	Tiger	01- 04	955	FRONT / REAR
TRIUMPH	Tiger	04- 06	955	FRONT
TRIUMPH	Bonneville Bobber	17-	1200	FRONT
TRIUMPH	Bonneville T120	16-	1200	FRONT
TRIUMPH	Bonneville T120 Ace	19-	1200	FRONT
TRIUMPH	Bonneville T120 Black	16-	1200	FRONT
TRIUMPH	Bonneville T120 Diamond	19-	1200	FRONT
TRIUMPH	Thruxton	16-	1200	FRONT
VOXAN	Scrambler	01- 03	1000	FRONT
YAMAHA	WR R, XY	09-	125	FRONT
YAMAHA	WR X	08-	250	FRONT

Tipo / *Type* : 3061

Marca / *Brand*	**Vehículo/ Modelo *Vehicle / Model***	**Año /*Year***	**Motor / *Engine***	**Eje / *Axle***
HYOSUNG	GA	98-	300	FRONT
HYOSUNG	GA GA-4	99-	450	FRONT
KAWASAKI	BR	86-	250	FRONT
KAWASAKI	CS	86-	250	FRONT
KAWASAKI	EL	91- 94	250	FRONT
KAWASAKI	EL	93- 94	250	FRONT
KAWASAKI	EL Eliminator	88- 89	250	FRONT
KAWASAKI	EX R Ninja	86- 87	250	FRONT / REAR
KAWASAKI	GPZ	83-	250	FRONT
KAWASAKI	GPZ R	86-	250	FRONT / REAR
KAWASAKI	KR	85	250	REAR
KAWASAKI	LX Eliminator, SE	90-	250	FRONT
KAWASAKI	Z Eliminator	88	250	FRONT

KAWASAKI	EL	97- 00	252	FRONT
KAWASAKI	EX	83	305	FRONT
KAWASAKI	GPZ	83- 96	305	FRONT
KAWASAKI	Eliminator	94-	400	REAR
KAWASAKI	EN Twin	85-	400	FRONT
KAWASAKI	FX R	86- 88	400	REAR
KAWASAKI	GPZ	85- 87	400	REAR
KAWASAKI	KLE Vulcan	90-	400	FRONT
KAWASAKI	Z Eliminator	88	400	FRONT / REAR
KAWASAKI	ZX	85	400	REAR
KAWASAKI	ZX	86-	400	FRONT / REAR
KAWASAKI	EN	85- 90	450	FRONT
KAWASAKI	Z LTD	84-	450	FRONT
KAWASAKI	EN	90- 96	500	FRONT
KAWASAKI	EN	98-	500	FRONT
KAWASAKI	EN Vulcan	96- 97	500	FRONT
KAWASAKI	GPZ R (Austria)	85-	500	FRONT / REAR
KAWASAKI	GPZ S	87	500	FRONT
KAWASAKI	GPZ S	89- 92	500	REAR
KAWASAKI	ZL (Austria)	85-	500	FRONT
KAWASAKI	GPZ	84- 87	550	FRONT / REAR
KAWASAKI	GT	85- 01	550	FRONT
KAWASAKI	Z F	85-	550	FRONT
KAWASAKI	ZX	84-	550	FRONT / REAR
KAWASAKI	GPZ R	85- 89	600	FRONT / REAR
KAWASAKI	Z GP	83-	600	FRONT / REAR
KAWASAKI	ZL	85-	600	FRONT
KAWASAKI	ZX Ninja	85- 87	600	FRONT / REAR
KAWASAKI	VN Vulcan	85	700	FRONT

KAWASAKI	ZN	84-	700	FRONT / REAR
KAWASAKI	Vulcan	93-	750	FRONT
KAWASAKI	GPZ	83- 87	750	FRONT / REAR
KAWASAKI	GPZ R	85- 86	750	FRONT / REAR
KAWASAKI	GPZ T	83-	750	FRONT / REAR
KAWASAKI	GT	86-	750	FRONT / REAR
KAWASAKI	VN Vulcan	86- 94	750	FRONT
KAWASAKI	VZ Twin	88	750	FRONT
KAWASAKI	Z	83- 84	750	FRONT
KAWASAKI	Z Eliminator	88	750	FRONT / REAR
KAWASAKI	Z LTD Twin	83-	750	FRONT / REAR
KAWASAKI	Z Turbo	84-	750	FRONT / REAR
KAWASAKI	ZX E, GP	83- 85	750	FRONT / REAR
KAWASAKI	VN Vulcan,Classic	95-	800	FRONT
KAWASAKI	GPZ R	84- 89	900	FRONT / REAR
KAWASAKI	ZL Eliminator	85- 86	900	FRONT / REAR
KAWASAKI	ZX	83- 84	900	FRONT / REAR
KAWASAKI	GPZ RX	86-	1000	FRONT / REAR
KAWASAKI	GTR	86- 93	1000	FRONT / REAR
KAWASAKI	GTR	94- 06	1000	REAR
KAWASAKI	Z R Ninja	86-	1000	FRONT / REAR
KAWASAKI	ZL	86-	1000	FRONT / REAR
KAWASAKI	GPZ	83-	1100	FRONT / REAR
KAWASAKI	Z GP	83-	1100	FRONT / REAR
KAWASAKI	Z LTD	85-	1100	FRONT / REAR
KAWASAKI	Z R, LTD	84	1100	FRONT / REAR
KAWASAKI	ZN LTD	84-	1100	FRONT / REAR
KAWASAKI	ZX GP	83-	1100	FRONT / REAR
KAWASAKI	ZG Voyager XII	86-	1200	FRONT / REAR

KAWASAKI	Z	85	1300	FRONT / REAR
KAWASAKI	ZN	83- 84	1300	FRONT / REAR
KAWASAKI	ZN Voy.	85-	1300	FRONT / REAR
KAWASAKI	VN Classic	97-	1500	REAR
KAWASAKI	VN Classic Tourer	98-	1500	REAR
KAWASAKI	VN Sumo	88-	1500	FRONT / REAR
KAWASAKI	VN Vulcan	87-	1500	FRONT / REAR
KAWASAKI	VN Vulcan, SE	87- 92	1500	FRONT / REAR

Tipo / *Type* : 3062

Marca / *Brand*	**Vehículo/ Modelo *Vehicle / Model***	**Año /*Year***	**Motor / *Engine***	**Eje / *Axle***
HUSABERG	FS e, c	01- 03	400	FRONT
HUSABERG	FS e, c	03- 05	450	FRONT
HUSABERG	FS e, c	01- 05	650	FRONT
KAWASAKI	KR-1 S	90	250	FRONT
KAWASAKI	ZX-4	90	400	FRONT
KAWASAKI	ZXR	89- 90	400	FRONT
KAWASAKI	ZZR	90- 94	400	FRONT
KAWASAKI	GPZ	93- 95	500	FRONT
KAWASAKI	ZZR (Austria)	90-	500	FRONT
KAWASAKI	R, Ninja	89-	600	FRONT
KAWASAKI	ZX-6R (Ninja ZX6)	93- 97	600	FRONT
KAWASAKI	ZX-6R (Ninja ZX6R)	95- 97	600	FRONT
KAWASAKI	ZX-6R (ZX6)	90- 93	600	FRONT
KAWASAKI	ZZR	90- 05	600	FRONT
KAWASAKI	ZX-7R Ninja	89- 95	750	FRONT
KAWASAKI	ZXR R	89- 95	750	FRONT
KAWASAKI	GPZ R	90- 96	900	FRONT

KAWASAKI	ZX-9R Ninja	94- 95	900	FRONT
KAWASAKI	Versys	12-	1000	FRONT
KAWASAKI	Versys ABS	15- 16	1000	FRONT
KAWASAKI	Versys LT	15-	1000	FRONT
KAWASAKI	ZR Zephyr	92- 95	1100	FRONT
KAWASAKI	ZX	93- 97	1100	FRONT
KAWASAKI	ZZR	90- 01	1100	FRONT
KAWASAKI	ZZR	02-	1200	FRONT
KAWASAKI	VN Voyager	09-	1700	FRONT
KAWASAKI	VN	04-	2000	FRONT
SUZUKI	RG F, Gamma	92- 96	125	FRONT
SUZUKI	RG Gamma	91-	200	FRONT
SUZUKI	GSX-S Cobra	90-	250	FRONT
SUZUKI	Wolf	90-	250	FRONT
SUZUKI	GSX-R R	89-	250	FRONT
SUZUKI	RGV	89- 95	250	FRONT
SUZUKI	RGV Gamma	91- 92	250	FRONT
SUZUKI	TV	88	250	FRONT
SUZUKI	Goose	92-	350	FRONT
SUZUKI	GSF Bandit	93- 97	400	FRONT
SUZUKI	GSX S, Katana	92-	400	FRONT
SUZUKI	GSX-R	88- 89	400	FRONT
SUZUKI	GSR	06- 10	600	FRONT
SUZUKI	GSX-R	97- 03	600	FRONT
SUZUKI	GSF Bandit	07-	650	FRONT
SUZUKI	GSF Bandit ABS	07- 12	650	FRONT
SUZUKI	GSF S Bandit	07-	650	FRONT
SUZUKI	GSF S Bandit ABS	07- 13	650	FRONT
SUZUKI	GSX F	08- 13	650	FRONT

SUZUKI	GSX-R Y	00- 03	750	FRONT
SUZUKI	SV S	03- 07	1000	FRONT
SUZUKI	TL S V-Twin	97- 01	1000	FRONT
SUZUKI	GSF Bandit	06	1200	FRONT
SUZUKI	GSF S Bandit	06	1200	FRONT
SUZUKI	GSF A Bandit	07-	1250	FRONT
SUZUKI	GSF Bandit	06-	1250	FRONT
SUZUKI	GSF F Bandit	12-	1250	FRONT
SUZUKI	GSF S Bandit	06-	1250	FRONT
SUZUKI	GSF SA Bandit	07-	1250	FRONT
SUZUKI	GSX FA Bandit	16-	1250	FRONT
SUZUKI	GSX FA Traveller	15-	1250	FRONT
SUZUKI	C Intruder Left/Rear	05- 10	1500	REAR
SUZUKI	VL Intruder LC Left/Rear	02	1500	REAR

Tipo / *Type* : 3063

Marca / *Brand*	**Vehículo/ Modelo *Vehicle / Model***	**Año /*Year***	**Motor / *Engine***	**Eje / *Axle***
APRILIA	SX Ltd.	14	50	FRONT
ATK	all models	94	50 to 500	FRNT / REAR
BENELLI	Caffenero Left/Rear	08-	125	FRNT / REAR
BENELLI	MJ	10-	125	FRNT / REAR
BENELLI	MJ	10-	150	FRNT / REAR
BENELLI	Caffenero Left/Rear	08-	250	FRONT
CAGIVA	Passing	94-	110	FRONT
CAGIVA	Canyon	95-	600	FRONT
CAN-AM	Commander Left/Rear	11-	800	REAR
CAN-AM	Commander Right	11-	800	FRONT
CAN-AM	Commander Left/Rear	11-	1000	REAR

CAN-AM	Commander MAX Right	14-	1000	FRONT
CAN-AM	Commander Right	11-	1000	FRONT
CAN-AM	Maverick Right	13-	1000	FRONT
CF MOTO	U-Force Right	15-	550	FRONT
CF MOTO	Z-Force Right	15-	550	FRONT
CF MOTO	Z-Force EX Right	15-	800	FRONT
DERBI	DXR Quad (Front drum)	04-	200	REAR
DERBI	DXR Quad (Front drum)	04-	250	REAR
GARELLI	Xo	12-	200	FRONT
HONDA	NSR	02-	150	REAR
HOREX	VR6	11- 16	1200	REAR
HUSQVARNA	all models CR, TC,TE,WR	92- 94	125 to 610	FRONT
HYOSUNG	Aquila	00-	125	FRONT
KAWASAKI	KLX	10- 14	125	FRONT
KAWASAKI	KLX D-Tracker	10- 14	125	FRONT
KAWASAKI	KX	89- 93	125	FRONT
KAWASAKI	KLX ,L	08-	140	FRONT
KAWASAKI	KLX D-Tracker	16-	150	FRONT
KAWASAKI	KLX L	14-	150	FRONT
KAWASAKI	KDX	93	200	FRONT
KAWASAKI	KDX SR	91- 94	250	FRONT
KAWASAKI	KLX	14-	250	FRONT
KAWASAKI	KLX S	09-	250	FRONT
KAWASAKI	KLX SF	09-	250	FRONT
KAWASAKI	KX	89- 93	250	FRONT
KAWASAKI	EL	01-	252	FRONT
KAWASAKI	KLF Bayou Left/Rear	89- 05	300	FRONT
KAWASAKI	KLF Bayou Left	93- 99	400	FRONT
KAWASAKI	KX	89- 93	500	FRONT

KAWASAKI	KLR	08-	650	FRONT
KAWASAKI	KVF Brute Force 4x4i Left	05-	650	FRONT
KAWASAKI	KRF Teryx 4x4 Left	08-	750	FRONT
KAWASAKI	KVF Brute Force 4x4i Left	05-	750	FRONT
KAWASAKI	Mule Pro FX Left	15-	800	FRONT
KAWASAKI	KRF Teryx BEF/ CEF/DEF	14-	800	FRONT
KAWASAKI	KRT Teryx 4 BEF/CEF/DEF	14-	800	FRONT
KAWASAKI	ZX H2 SX	18-	1000	REAR
KAWASAKI	ZX H2 SX SE	18-	1000	REAR
KAWASAKI	ZX H2R SX SE+	19-	1000	REAR
KYMCO	S People Left/Rear	06-	250	FRONT
PEUGEOT	Django Heritage	14-	50	FRONT
PEUGEOT	Django Heritage	14-	125	FRONT
PEUGEOT	Geopolis (Nissin cal.)	07-	125	FRONT / REAR
PEUGEOT	Vivacity	10-	125	FRONT
PEUGEOT	GT Satelis Sport	11-	125	FRONT / REAR
PEUGEOT	Django Heritage	14-	150	FRONT
PEUGEOT	Geopolis GT	14-	300	REAR
PEUGEOT	Geopolis Premium (Nissin	10-	300	FRONT / REAR
PEUGEOT	Geopolis RS (Nissin cal.)	10-	300	FRONT / REAR
PEUGEOT	Geostyle (Nissin cal.)	10-	300	FRONT / REAR
PEUGEOT	Satelis	13-	300	FRONT / REAR
PEUGEOT	Geopolis (Nissin cal.)	07-	400	FRONT / REAR
PEUGEOT	Geopolis GT	14-	400	REAR
PEUGEOT	Geopolis RS	08-	400	REAR
PEUGEOT	Satelis i	14-	400	REAR
PEUGEOT	Satelis	07-	500	REAR
PGO	Libra	10-	125	FRONT
PGO	X-Hot	10-	125	FRONT

SUZUKI	EN	05-	125	FRONT
SUZUKI	RM	87	125	FRONT
SUZUKI	RM	88- 95	125	FRONT
SUZUKI	TS	89- 96	125	FRONT
SUZUKI	TS R	90- 94	200	FRONT
SUZUKI	DR	90- 95	250	FRONT
SUZUKI	RM	88- 95	250	FRONT
SUZUKI	RMX	89- 95	250	FRONT
SUZUKI	LT-F King Quad Left/Rear	02-	300	FRONT
SUZUKI	DR	90- 99	350	FRONT
SUZUKI	AN Burgman Left/Rear	07- 16	400	FRONT
SUZUKI	AN Burgman Left/Rear	17-	400	FRONT
SUZUKI	LT-R Left/Rear	06-	450	FRONT
SUZUKI	LT-A FY Quadmaster Left	00-	500	FRONT
SUZUKI	LT-F F Right	98-	500	FRONT
SUZUKI	RM	87-	500	FRONT
TRIUMPH	Trident Left/Rear	91-	750	FRONT / REAR
TRIUMPH	America	03- 06	800	REAR
TRIUMPH	Bonneville	01- 04	800	REAR
TRIUMPH	Bonneville America	02-	800	REAR
TRIUMPH	Bonneville T100 Centennial	02- 04	800	REAR
TRIUMPH	Bonneville T100 Paul Smith	06- 08	800	REAR
TRIUMPH	Speedmaster	03- 04	800	REAR
TRIUMPH	America	07-	900	REAR
TRIUMPH	Bonneville	09-	900	REAR
TRIUMPH	Bonneville Newchurch	15-	900	REAR
TRIUMPH	Bonneville SE	09- 13	900	REAR
TRIUMPH	Bonneville Spirit	15-	900	REAR
TRIUMPH	Bonneville Street Cup	17-	900	REAR

TRIUMPH	Bonneville T100	05- 08	900	REAR
TRIUMPH	Bonneville T100	09- 16	900	REAR
TRIUMPH	Bonneville T100	17-	900	REAR
TRIUMPH	Bonneville T100 Black	17-	900	REAR
TRIUMPH	Bonneville T214	15-	900	REAR
TRIUMPH	Daytona, Sprint Left/Rear	93	900	FRONT / REAR
TRIUMPH	Scrambler	06- 16	900	REAR
TRIUMPH	Speedmaster	05-	900	REAR
TRIUMPH	Street Cup	17-	900	REAR
TRIUMPH	Street Scrambler	17- 18	900	REAR
TRIUMPH	Street Scrambler	19-	900	REAR
TRIUMPH	Street Twin	16- 18	900	REAR
TRIUMPH	Street Twin	19-	900	REAR
TRIUMPH	Thruxton	04-	900	REAR
TRIUMPH	Thruxton Ace	15	900	REAR
TRIUMPH	Tiger Left/Rear	93- 98	900	FRONT / REAR
TRIUMPH	Trident Left/Rear	91-	900	FRONT / REAR
TRIUMPH	Trophy Left/Rear	91- 95	900	FRONT / REAR
TRIUMPH	T509 Speed Triple	97- 01	900	REAR
TRIUMPH	T595 Daytona	96- 98	950	REAR
TRIUMPH	Daytona Centennial	02-	955	REAR
TRIUMPH	Daytona to VIN 132512	99-	955	REAR
TRIUMPH	Speed Triple	99-	955	REAR
TRIUMPH	Sprint RS	00-	955	REAR
TRIUMPH	Sprint ST	99- 04	955	REAR
TRIUMPH	Trophy Left/Rear	91- 95	1000	FRONT / REAR
TRIUMPH	Speed 94	15-	1050	REAR
TRIUMPH	Speed 94R	15-	1050	REAR
TRIUMPH	Speed Triple	16-	1050	REAR

TRIUMPH	Speed Triple (Rad.cal)	05- 15	1050	REAR
TRIUMPH	Speed Triple R	12- 15	1050	REAR
TRIUMPH	Speed Triple R	16-	1050	REAR
TRIUMPH	Speed Triple RS	19-	1050	REAR
TRIUMPH	Speed Triple S	16-	1050	REAR
TRIUMPH	Sprint GT ABS	11-	1050	REAR
TRIUMPH	Sprint ST	05- 11	1050	REAR
TRIUMPH	Tiger Sport	15-	1050	REAR
TRIUMPH	Bonneville Bobber	17-	1200	REAR
TRIUMPH	Bonneville T120	16-	1200	REAR
TRIUMPH	Bonneville T120 Ace	19-	1200	REAR
TRIUMPH	Bonneville T120 Black	16-	1200	REAR
TRIUMPH	Bonneville T120 Diamond	19-	1200	REAR
TRIUMPH	Thruxton	16-	1200	REAR
TRIUMPH	Thruxton R	16-	1200	REAR
TRIUMPH	Tiger Explorer	12-	1200	REAR
TRIUMPH	Tiger Explorer	16-	1200	REAR
TRIUMPH	Tiger XCA	18-	1200	REAR
TRIUMPH	Tiger XCX	18-	1200	REAR
TRIUMPH	Tiger XR	18-	1200	REAR
TRIUMPH	Tiger XRT	18-	1200	REAR
TRIUMPH	Tiger XRX	18-	1200	REAR
TRIUMPH	Tiger XRX Low	18-	1200	REAR
TRIUMPH	Trophy Left/Rear	91- 95	1200	FRONT / REAR
TRIUMPH	Trophy SE	13-	1200	REAR
YAMAHA	FZR	92-	50	FRONT
YAMAHA	YD	89-	80	FRONT
YAMAHA	WR	91- 97	125	FRONT
YAMAHA	XTZ	05-	125	FRONT

YAMAHA	YZ	89- 97	125	FRONT
YAMAHA	DT WR	91- 93	200	FRONT
YAMAHA	WR	91- 92	200	FRONT
YAMAHA	TT-R	05-	230	FRONT
YAMAHA	TT	93- 03	250	FRONT
YAMAHA	WR	90- 97	250	FRONT
YAMAHA	YZ	89	250	FRONT
YAMAHA	YZ A	90	250	FRONT
YAMAHA	YZ B1-J1	91- 97	250	FRONT
YAMAHA	YZ WRA,WRB	90- 91	250	FRONT
YAMAHA	TT	95-	350	FRONT
YAMAHA	YZ	89	360	FRONT
YAMAHA	YFZ S Right	04- 09	450	FRONT
YAMAHA	YXR Rhino Left/Rear	06-	450	FRONT
YAMAHA	WR B	91	500	FRONT
YAMAHA	WR ZD,ZE	92- 93	500	FRONT
YAMAHA	Rhino Left/Rear	05-	660	FRONT
YAMAHA	YFM R Raptor Left/Rear	06- 08	700	FRONT
YAMAHA	YFM Raptor	09-	700	FRONT
YAMAHA	YXR Rhino Right	08-	700	FRONT / REAR
YAMAHA	XTZ Super Tenere Left/Rear	89- 95	750	FRONT

Tipo / *Type* : 3064

Marca / *Brand*	**Vehículo/ Modelo *Vehicle / Model***	**Año /*Year***	**Motor / *Engine***	**Eje / *Axle***
AEON	Overland	02-	125	REAR
AEON	Overland	02-	180	REAR
AEON	Roadster	02-	180	REAR
ARCTIC CAT	DVX	06-	50	REAR

ARCTIC CAT	DVX	06-	90	REAR
BENELLI	Caffenero Right	08-	125	FRONT
BENELLI	Caffenero Right	08-	250	FRONT
CAGIVA	Canyon	99-	500	REAR
CAGIVA	Canyon	95-	600	REAR
CAGIVA	Canyon I.E.	97-	900	REAR
CAGIVA	Elefant I.E.	91- 92	900	REAR
CAGIVA	Gran Canyon	99- 04	900	REAR
CAGIVA	Navigator, T	00- 05	1000	REAR
CAN-AM	Commander Left/Rear	11-	800	FRONT
CAN-AM	Commander Left/Rear	11-	1000	FRONT
CAN-AM	Commander MAX Left	14-	1000	FRONT
CAN-AM	Maverick Left	13-	1000	FRONT
CF MOTO	U-Force Left	15-	550	FRONT
CF MOTO	Z-Force Left	15-	550	FRONT
CF MOTO	Z-Force EX Left	15-	800	FRONT
HONDA	CB F	15-	125	FRONT
HONDA	CA Rebel	90-	250	FRONT
HYOSUNG	GV	17-	250	REAR
HYOSUNG	GV	16-	300	REAR
JINCHENG	JC 2A/3A	97-	125	FRONT
KAWASAKI	BN Eliminator A3	00-	125	FRONT
KAWASAKI	Ninja	19-	125	FRONT / REAR
KAWASAKI	Z	19-	125	FRONT / REAR
KAWASAKI	Versys-X	17-	250	REAR
KAWASAKI	EX R Ninja	08-12	250	FRONT / REAR
KAWASAKI	EX SL Ninja	15-	250	FRONT / REAR
KAWASAKI	Z SL	15-	250	FRONT / REAR
KAWASAKI	EX R Ninja, ABS	13-	300	FRONT / REAR

KAWASAKI	KLE Versys-X	17-	300	REAR
KAWASAKI	KLF Bayou Right	89-05	300	REAR
KAWASAKI	Z	15-	300	FRONT / REAR
KAWASAKI	EX Ninja	18-	400	FRONT / REAR
KAWASAKI	EX Ninja SE	18-	400	FRONT / REAR
KAWASAKI	KLF Bayou Right	93-99	400	REEAR
KAWASAKI	Z	19-	400	FRONT / REAR
KAWASAKI	KLR	08-	650	REAR
KAWASAKI	KVF Brute Force 4x4i Right	05-	650	FRONT
KAWASAKI	KRF Teryx 4x4 Right	08-	750	FRONT
KAWASAKI	KVF Brute Force 4x4i Right	05-	750	FRONT
KAWASAKI	Mule Pro FX Right	15-	800	FRONT
KAWASAKI	KRF Teryx BEF/CEF/DEF	14-	800	FRONT
KAWASAKI	KRT Teryx 4 BEF/CEF/DEF	14-	800	FRONT
KREIDLER	Florett D	07-	125	FRONT
KREIDLER	Florett RMC-F	07-	125	FRONT
KYMCO	S People Right	06-	250	FRONT
MOTOR UNION	HK Haoke	97-	250	FRONT
MZ	SM, SX	99-	125	REAR
MZ	RT	06-	125	FRONT / REAR
SUZUKI	UH Burgman	14-	200	FRONT
SUZUKI	LT-F King Quad Right	02-	300	FRONT
SUZUKI	AN Burgman Right	07- 16	400	FRONT
SUZUKI	AN Burgman Right	17-	400	FRONT
SUZUKI	LT-R Right	06-	450	FRONT
SUZUKI	LT-A FY Quadmaster Right	00-	500	FRONT
SUZUKI	LT-F F Left	98-	500	FRONT
SUZUKI	DR S, Big	91-95	800	REAR
SUZUKI	DR ST Big	96	800	REAR

TRIUMPH	Daytona	91- 92	750	REAR
TRIUMPH	Trident Right	91-	750	FRONT
TRIUMPH	Daytona	91- 94	900	REAR
TRIUMPH	Daytona Super III	94-	900	REAR
TRIUMPH	Bonneville	05- 08	900	REAR
TRIUMPH	Daytona, Sprint	94-	900	REAR
TRIUMPH	Daytona, Sprint Right	93	900	FRONT
TRIUMPH	Speed Triple	94- 96	900	REAR
TRIUMPH	Tiger Right	93- 98	900	FRONT
TRIUMPH	Trident Right	91-	900	FRONT
TRIUMPH	Trophy Right	91- 95	900	FRONT
TRIUMPH	Trophy	96-	900	REAR
TRIUMPH	Tiger	04- 06	955	REAR
TRIUMPH	Daytona	92	1000	REAR
TRIUMPH	Trophy Right	91- 95	1000	FRONT
TRIUMPH	Tiger	07-	1050	REAR
TRIUMPH	Tiger SE (Rad.cal)	09-	1050	REAR
TRIUMPH	Daytona	91-	1200	REAR
TRIUMPH	Trophy	96- 03	1200	REAR
TRIUMPH	Trophy Right	91- 95	1200	FRONT
VOXAN	Scrambler	01- 03	1000	REAR
YAMAHA	FZR	90-	50	FRONT
YAMAHA	TZM R	94-	50	FRONT
YAMAHA	TZR	90- 02	50	FRONT
YAMAHA	YBR	07-	250	FRONT
YAMAHA	YFZ S Left/Rear	04-09	450	FRONT
YAMAHA	YXR Rhino Right	06-	450	FRONT
YAMAHA	Rhino Right	05-	660	FRONT
YAMAHA	YFM R Raptor Right	06-08	700	FRONT

YAMAHA	YFM Raptor	09-	700	FRONT
YAMAHA	YXR Rhino Left	08-	700	FRONT / REAR
YAMAHA	XTZ Super Tenere Right	89-95	750	FRONT
YAMAHA	XTZ Super Tenere Left/Rear	89- 95	750	REAR

Tipo / *Type* : 3069

Marca / *Brand*	**Vehículo/ Modelo *Vehicle / Model***	**Año /*Year***	**Motor / *Engine***	**Eje / *Axle***
BETA	R	10-	150	FRONT
CAGIVA	Mito	99-	50	FRONT
CAGIVA	Stella	97-	125	FRONT
DAELIM	\\ City Ace	03-	110	FRONT
FACTORY	YR	06-	125	FRONT
GARELLI	Joker 2	02-	125	FRONT
GARELLI	Joker 2	02-	150	FRONT
GARELLI	Flexi	12-	125	FRONT
GARELLI	Xo	12-	125	FRONT
GARELLI	Xo	12-	150	FRONT
HONDA	MBX S	83- 85	50	FRONT
HONDA	NS F, Aero	88-	50	FRONT
HONDA	NS-1	91-	50	FRONT
HONDA	NSR	89- 90	50	FRONT
HONDA	NSR FII	88- 00	75	FRONT
HONDA	NSR R	87- 92	80	FRONT
HONDA	MBX	83- 86	80	FRONT
HONDA	MBX DX	82-	80	FRONT
HONDA	MBX SW, SWD	83-	80	FRONT
HONDA	CBX Custom	88	125	FRONT
HONDA	FS Sonic	03-	125	FRONT

HONDA	MBX RWB	84-	125	FRONT
HONDA	CB Rebel	86-	250	FRONT
HONDA	CMX Rebel	85-	250	FRONT
HYOSUNG	Boomer	03-	125	REAR
HYOSUNG	Exceed	02-	125	REAR
HYOSUNG	Grand Prix Plus	02-	125	FRONT
HYOSUNG	GT Comet	02- 03	125	FRONT
HYOSUNG	GV Aguila	02- 04	125	FRONT
HYOSUNG	RT Karion	02- 06	125	FRONT
HYOSUNG	RX	00-	125	FRONT
HYOSUNG	XRX Offroad	99- 06	125	FRONT
HYOSUNG	GT	07-	125	FRONT / REAR
HYOSUNG	GT Comet	04-	125	FRONT / REAR
HYOSUNG	GT Naked	13-	125	FRONT / REAR
HYOSUNG	GT R Supersport	07-	125	FRONT / REAR
HYOSUNG	GV Aguila	05-	125	FRONT
HYOSUNG	RT Karion	07-	125	FRONT / REAR
HYOSUNG	RX SM	07-	125	FRONT / REAR
HYOSUNG	XRX	07-	125	FRONT / REAR
HYOSUNG	Exceed	02-	150	REAR
HYOSUNG	GT Comet	03-	250	FRONT / REAR
HYOSUNG	GT iR	13- 14	250	FRONT / REAR
HYOSUNG	GT P	13-	250	FRONT / REAR
HYOSUNG	GT R	07-	250	FRONT / REAR
HYOSUNG	GV	02-	250	FRONT
HYOSUNG	XRX	05-	400	FRONT
HYOSUNG	Comet	03	600	FRONT
HYOSUNG	GV Aguila	04- 05	650	FRONT
HYOSUNG	GT	04-	650	FRONT / REAR

HYOSUNG	GT i	13-	650	REAR
HYOSUNG	GT i Naked	15-	650	REAR
HYOSUNG	GT iR	13- 14	650	REAR
HYOSUNG	GT P	16-	650	FRONT / REAR
HYOSUNG	GT R	05-	650	FRONT / REAR
HYOSUNG	GT S	05-	650	FRONT / REAR
HYOSUNG	GT TTC	07-	650	FRONT / REAR
HYOSUNG	GT TTC / Custom Trendkiller	07-	650	FRONT / REAR
HYOSUNG	GT X	07-	650	FRONT / REAR
HYOSUNG	GV Aguila	06-	650	FRONT / REAR
HYOSUNG	ST	11-	700	REAR
HYOSUNG	ST i Deluxe	13-	700	REAR
ITALJET	Rollercraft	08-	50	FRONT
ITALJET	Torpedo	08-	125	FRONT
ITALJET	Torpedo	08-	150	FRONT
ITALJET	Bazooka	06-	650	FRONT / REAR
ITALJET	Grifon	06-	650	FRONT / REAR
KEEWAY	RY8	10-	50	REAR
KYMCO	Nexxon	08-	50	FRONT / REAR
KYMCO	Spike	02-	100	FRONT
KYMCO	Spike	03-	110	FRONT
KYMCO	Jetix	08-	125	FRONT
KYMCO	Nexxon	08-	125	FRONT / REAR
KYMCO	Spike	02-	125	FRONT
KYMCO	CK	04- 13	125	FRONT
KYMCO	DX Custom	93-	150	FRONT
KYMCO	NSR	93-	150	FRONT
KYMCO	Straight	08-	150	FRONT / REAR
MASH	Cafe Racer	14-	125	FRONT

MASH	Seventy Five	14-	125	FRONT
MASH	Cafe Racer	14-	250	FRONT
MASH	Two Fifty	14-	250	FRONT
MEGELLI	M, R, S	08-	125	FRONT
MZ	Mantizz S	07-	125	FRONT
PEUGEOT	Speedfight 3 (AC)	10-	50	FRONT
PEUGEOT	Speedfight 3 (LC)	10-	50	FRONT
PEUGEOT	Speedfight 3 RS (LC)	10-	50	FRONT
PEUGEOT	Speedfight 4 (AC)	15-	50	FRONT
PEUGEOT	Speedfight 4 (LC)	15-	50	FRONT
SACHS	MadAss	04-	50	FRONT
SACHS	MadAss 4T	05-	50	FRONT
SACHS	MadAss	09-	125	FRONT
SYM	Wolf Legend	02-	125	FRONT
SYM	Wolf Classic	05-	125	FRONT
SYM	MF	03-	180	FRONT

Tipo / *Type* : 3070

Marca / *Brand*	**Vehículo/ Modelo *Vehicle / Model***	**Año /*Year***	**Motor / *Engine***	**Eje / *Axle***
AEON	Elite	13-16	125	FRONT
AEON	Urban	11-16	125	FRONT
AEON	Elite	11-	250	FRONT
AEON	Urban	11-	350	FRONT
AEON	Elite	13-	400	FRONT
BENELLI	Zenzero	12-	350	FRONT
DAELIM	a Four	06-	50	FRONT
DAELIM	Delfino	08-	125	FRONT
GENERIC	Zion	08-	125	FRONT

HONDA	CA Rebel	95- 96	125	FRONT
HONDA	CMX C Rebel	96-	250	FRONT
JINCHENG	JC	06-	250	FRONT
KEEWAY	Superlight	06-	125	FRONT
KEEWAY	Superlight	06-	150	FRONT
KEEWAY	Land Cruiser	06-	250	FRONT
KREIDLER	Enduro	07-	125	FRONT
KREIDLER	Supermoto	07-	125	FRONT
KREIDLER	Enduro	07-	200	FRONT
KYMCO	Agility	05- 08	50	FRONT
KYMCO	Agility (4T) R10	06-	50	FRONT
KYMCO	Agility (4T) R12	06-	50	FRONT
KYMCO	Filly LX	02-	50	FRONT
KYMCO	New Sento	11-	50	FRONT
KYMCO	Sento	08- 10	50	FRONT
KYMCO	Vitality	04-	50	FRONT
KYMCO	Yup SP/AL	02-	50	FRONT
KYMCO	RS Agility Naked	10-	50	FRONT
KYMCO	Agility	06-	125	FRONT
KYMCO	Agility City	11-	125	FRONT
KYMCO	Like	11-	125	FRONT
KYMCO	Stryker on/off	99-	125	FRONT
KYMCO	Vivio	01-	125	FRONT
KYMCO	Stryker Off	01-	150	FRONT
KYMCO	Vivio	01-	150	FRONT
KYMCO	People Si Left/Rear	08-	300	FRONT
MALAGUTI	Blog	10-	125	FRONT
MALAGUTI	Centro ie	08- 11	125	FRONT
MALAGUTI	Blog	10-	160	FRONT

MALAGUTI	Centro ie	08- 11	160	FRONT
MZ	SM, SX	02-	125	FRONT
PGO	I-Charge Fuel Injection	03-	125	FRONT
QUINGOI	QM GY	02-	125	FRONT
TGB	203	05-	50	FRONT
TGB	Akros tec 5	99- 04	50	FRONT
TGB	Apollo	99-	50	FRONT
TGB	Fire, Sky	03-	50	FRONT
TGB	Apollo	99-	90	FRONT
TGB	Dynasty	06-	250	FRONT

Tipo / *Type* : 3071

Marca / *Brand*	**Vehículo/ Modelo *Vehicle / Model***	**Año /*Year***	**Motor / *Engine***	**Eje / *Axle***
BENELLI	Imperiale	19-	400	FRONT
DAELIM	Roadwin	04-	125	FRONT
DAELIM	Rocket	99-	125	FRONT
DAELIM	VL Daystar	00-	125	FRONT
DAELIM	VT Evolution	00-	125	FRONT
DAELIM	VT Magna	97-	125	FRONT
DAELIM	Roadwin	08-	250	FRONT
HONDA	CBR RR	17-	250	FRONT
HONDA	VTR	98- 02	250	FRONT
HONDA	CBR F	14- 17	300	FRONT
HONDA	CBR F ABS	14- 17	300	FRONT
HONDA	CBR R	15-	300	FRONT
HONDA	CMX Rebel	17-	300	FRONT
HONDA	CB Super Four	92- 95	400	FRONT
HONDA	VRX T Roadstar	95-	400	FRONT

HONDA	CB F	13-	500	FRONT
HONDA	CB X	13-	500	FRONT
HONDA	CBF	04- 08	500	FRONT
HONDA	CBR R	13-	500	FRONT
HONDA	CMX Rebel	17-	500	FRONT
HONDA	XL V, Transalpino	94- 96	600	FRONT
HONDA	CB F	14-	650	FRONT
HONDA	CBR F	14-	650	FRONT
HONDA	CBR F ABS	14-	650	FRONT
HONDA	NTV	94-	650	FRONT
HONDA	DN-01	08-	680	REAR
HONDA	CTX	14-	700	FRONT
HONDA	CTX D ABS w/DCT	14-	700	FRONT
HONDA	CTX N	14-	700	FRONT
HONDA	CTX ND ABS w/DCT	14-	700	FRONT
HONDA	NC D Integra	14-	750	FRONT
HONDA	NC S w/DCT	14-	750	FRONT
HONDA	NC X w/DCT	14-	750	FRONT
HONDA	NM4 Vultus ABS w/DCT	15-	750	FRONT
HONDA	VT Black Widow	01- 03	750	FRONT
HONDA	VT C2 Shadow A.C.E.	97- 03	750	FRONT
HONDA	VT C2 Shadow Spirit	07- 11	750	FRONT
HONDA	VT C2B	11-	750	FRONT
HONDA	VT C4 Shadow	04-	750	FRONT
HONDA	VT RS	11-	750	FRONT
HONDA	VT S	11-	750	FRONT
HONDA	VF C, CD Magna	94- 98	750	FRONT
HONDA	VFR F	88- 98	750	REAR
HONDA	VFR F, Carat	92-	950	REAR

HONDA	CBF	06- 11	1000	FRONT
HONDA	CBF Limited Edition	09- 14	1000	FRONT
HONDA	CBR F	89- 92	1000	REAR
HONDA	VFR	89	1000	REAR
HONDA	ST	90- 02	1100	REAR
HONDA	ST ABS-TCS	92- 95	1100	REAR
HONDA	CTX	14-	1300	REAR
HONDA	GL F6 C Valkyrie	96- 02	1500	REAR
INDIAN	Chief Classic	14-	1800	REAR
INDIAN	Chief Vintage	14-	1800	REAR
INDIAN	Chieftain	14-	1800	REAR
INDIAN	Dark Horse	16-	1800	REAR
INDIAN	Roadmaster	15-	1800	REAR
INDIAN	Springfield	16-	1800	REAR
TRIUMPH	Adventurer	96-	900	REAR
TRIUMPH	Legend TT	99-	900	REAR
TRIUMPH	Thunderbird	96-	900	REAR
TRIUMPH	Thunderbird Sport	03-	900	REAR
TRIUMPH	Tiger	99- 00	900	REAR
VICTORY	Hammer	08	1634	REAR
VICTORY	Kingpin all models	08-	1634	REAR
VICTORY	Vegas	08-	1634	REAR
VICTORY	Vegas 8-Ball	08-	1634	REAR
VICTORY	Vegas Jackpot	08	1634	REAR
VICTORY	Boardwalk	13-	1731	REAR
VICTORY	Cross Country	10-	1731	REAR
VICTORY	Cross Country 8-Ball	14-	1731	REAR
VICTORY	Cross Country Tour	12-	1731	REAR
VICTORY	Cross Roads	10-	1731	REAR

VICTORY	Cross Roads 8-Ball	14-	1731	REAR
VICTORY	Cross Roads Classic	14-	1731	REAR
VICTORY	Gunner	15-	1731	REAR
VICTORY	Hammer	09-	1731	REAR
VICTORY	Hammer	10-	1731	REAR
VICTORY	Hammer S	09-	1731	REAR
VICTORY	Hard-Ball	12-	1731	REAR
VICTORY	High-Ball	12-	1731	REAR
VICTORY	Jackpot	10-	1731	REAR
VICTORY	Judge	13-	1731	REAR
VICTORY	Kingpin	10-	1731	REAR
VICTORY	Kingpin 8-Ball	10-	1731	REAR
VICTORY	Magnum	15-	1731	REAR
VICTORY	Magnum X-1	15-	1731	REAR
VICTORY	Vegas	10-	1731	REAR
VICTORY	Vegas 8-Ball	10-	1731	REAR
VICTORY	Vegas Jackpot	09-	1731	REAR
VICTORY	Vision all models	08-	1731	REAR
YAMAHA	VP X-City	08-	125	FRONT
YAMAHA	YP X-Max	10-	125	FRONT
YAMAHA	YP X-Max ABS	11-	125	FRONT
YAMAHA	YP X-Max Business ABS	11-	125	FRONT
YAMAHA	YP X-Max Sport Ed.	11-	125	FRONT
YAMAHA	VP X-City	07-	250	FRONT
YAMAHA	YP X-Max	10-	250	FRONT
YAMAHA	VP Versity	05- 06	300	FRONT
YAMAHA	YP R X-Max	13-	400	FRONT
YAMAHA	YP RA X-Max	14-	400	FRONT
YAMAHA	MT-01 (Rad.cal)	05-	1700	REAR

Tipo / *Type* : 3072

Marca / *Brand*	**Vehículo/ Modelo *Vehicle / Model***	**Año /*Year***	**Motor / *Engine***	**Eje / *Axle***
HONDA	NSS	00- 04	250	REAR
HONDA	NSS Forza	00- 04	250	REAR
HONDA	NSS Jazz	01- 04	250	REAR
HONDA	CBR F	92-	400	REAR
HONDA	CBF	04- 08	500	REAR
HONDA	CBF ABS	04- 08	500	REAR
HONDA	CB Hornet	98- 06	600	REAR
HONDA	CB Hornet (Japan)	98- 99	600	REAR
HONDA	CB Hornet ABS	07- 12	600	REAR
HONDA	CB Hornet S	00- 03	600	REAR
HONDA	CBF N	04- 11	600	REAR
HONDA	CBF N ABS	08- 11	600	REAR
HONDA	CBF S	04- 11	600	REAR
HONDA	CBF S ABS	08- 11	600	REAR
HONDA	CBR F ABS	11-	600	REAR
HONDA	CBR F, Super Sport	91- 94	600	REAR
HONDA	CBR F3	95- 98	600	REAR
HONDA	CBR F4, F4 Sport	99- 06	600	REAR
HONDA	CBR RR	03- 04	600	REAR
HONDA	CBR RR (Rad.cal)	05- 06	600	REAR
HONDA	FMX	05- 08	650	REAR
HONDA	NT V Deauville	01	650	REAR
HONDA	NC D Integra	12- 13	700	REAR
HONDA	NC SA ABS	12- 13	700	REAR
HONDA	NC SD ABS	12- 13	700	REAR

HONDA	NC XA ABS	12- 13	700	REAR
HONDA	NC XD ABS	12- 13	700	REAR
HONDA	XL Transalp ABS	08-	700	REAR
HONDA	CB N, F, Seven Fifty	92- 95	750	REAR
HONDA	NR	92-	750	REAR
HONDA	CB Hornet	02- 07	900	REAR
HONDA	CBR RR Fireblade	92- 03	900	REAR
HONDA	CB F (Big One)	93- 97	1000	REAR
HONDA	CBF	06- 11	1000	REAR
HONDA	CBF F ABS	15-	1000	REAR
HONDA	CBF Limited Edition	09- 14	1000	REAR
HONDA	CBR RR Fireblade (Rad.cal)	04- 05	1000	REAR
HONDA	CRF L Africa Twin	16-	1000	REAR
HONDA	CRF L Africa Twin Adventure	18-	1000	REAR
HONDA	VTR F Firestorm	97- 07	1000	REAR
HONDA	VTR SP-1, SP-2	00- 06	1000	REAR
HONDA	CB , EX	14- 16	1100	REAR
HONDA	CB	13	1100	REAR
HONDA	CB EX	17-	1100	REAR
HONDA	CB RS ABS	17-	1100	REAR
HONDA	CRF L Africa Twin	20-	1100	REAR
HONDA	VT C2 Shadow A.C.E.	95-	1100	REAR
HONDA	VT C2 Y	00-	1100	REAR
HONDA	VT C3 Shadow Aero	98-	1100	REAR
HONDA	VT T Shadow	98-	1100	REAR
HONDA	CB	05-	1300	REAR
HONDA	CB S	11-	1300	REAR
HONDA	VT CX A Fury	10- 12	1300	REAR
HONDA	VTX C	04- 09	1300	REAR

HONDA	VTX S	03- 07	1300	REAR
KAWASAKI	EN Vulcan S	15-	650	REAR
KAWASAKI	EN Vulcan S Cafe	17-	650	REAR
KAWASAKI	EN Vulcan S SE	17-	650	REAR
KAWASAKI	EX Ninja ABS	17-	650	REAR
KAWASAKI	Z ABS	17-	650	REAR
KAWASAKI	Z ABS	07- 12	750	REAR
KAWASAKI	Z RS	18-	900	REAR
KAWASAKI	Z RS Cafe	18-	900	REAR
KAWASAKI	Versys	12-	1000	REAR
KAWASAKI	Versys ABS	15- 16	1000	REAR
KAWASAKI	Versys LT	15-	1000	REAR
KAWASAKI	KLE Versys SE	19-	1000	REAR
KAWASAKI	KLV Left/Rear	04- 07	1000	REAR
KAWASAKI	Z (Rad.cal)	10- 13	1000	REAR
KAWASAKI	Z	07- 09	1000	REAR
KAWASAKI	Z H2	20-	1000	REAR
SUZUKI	DL V-Strom	17-	250	REAR
SUZUKI	GSX-R	17-	250	REAR
SUZUKI	DL V-Strom Left/Rear	04- 13	650	REAR
SUZUKI	DL V-Strom Left/Rear	17-	650	REAR
SUZUKI	DL V-Strom XT Left/Rear	15- 16	650	REAR
SUZUKI	DL V-Strom XT Left/Rear	17-	650	REAR
SUZUKI	GSF Bandit	07-	650	REAR
SUZUKI	GSF Bandit / S Bandit	06	650	REAR
SUZUKI	GSF Bandit ABS	07- 12	650	REAR
SUZUKI	GSF S Bandit	07-	650	REAR
SUZUKI	GSF S Bandit ABS	07- 13	650	REAR
SUZUKI	GSX F	08- 13	650	REAR

SUZUKI	SV S Left/Rear	03- 12	650	REAR
SUZUKI	GSR Left/Rear	11-	750	REAR
SUZUKI	GSX-S	17-	750	REAR
SUZUKI	GSX-S Left/Rear	15- 16	750	REAR
SUZUKI	GSX-S Z Left/Rear	15- 16	750	REAR
SUZUKI	DL V-Strom Left/Rear	02- 13	1000	REAR
SUZUKI	Katana	19-	1000	REAR
SUZUKI	GSX-S	15-	1000	REAR
SUZUKI	GSX-S F	15-	1000	REAR
SUZUKI	SV S	03- 07	1000	REAR
SUZUKI	GSF Bandit	06	1200	REAR
SUZUKI	GSF S Bandit	06	1200	REAR
SUZUKI	GSF A Bandit	07-	1250	REAR
SUZUKI	GSF Bandit	06-	1250	REAR
SUZUKI	GSF F Bandit	12-	1250	REAR
SUZUKI	GSF S Bandit	06-	1250	REAR
SUZUKI	GSF SA Bandit	07-	1250	REAR
SUZUKI	GSX FA Bandit	16-	1250	REAR
SUZUKI	GSX FA Traveller	15-	1250	REAR
SUZUKI	B-King	07	1300	REAR
YAMAHA	FZ6	04-	600	REAR
YAMAHA	FZ6 Fazer	04-	600	REAR
YAMAHA	FZ6 Fazer S2	07-	600	REAR
YAMAHA	FZ6 Fazer S2 ABS	07-	600	REAR
YAMAHA	FZ6 S2	07-	600	REAR
YAMAHA	FZ6 S2 ABS	07-	600	REAR
YAMAHA	XJ6-F	13-	600	REAR
YAMAHA	XJ6-N	13-	600	REAR
YAMAHA	XJ6-S	13-	600	REAR

YAMAHA	YZF R6	03- 04	600	REAR
YAMAHA	YZF R6 (Rad.cal)	05- 16	600	REAR
YAMAHA	MT-07	14-	700	REAR
YAMAHA	MT-07 Moto Cage	15-	700	REAR
YAMAHA	MT-07 SP	18-	700	REAR
YAMAHA	MT-07 Tracer	16- 18	700	REAR
YAMAHA	MT-07 Tracer GT	18- 19	700	REAR
YAMAHA	MT-07 Tracer	20-	700	REAR
YAMAHA	XSR	16-	700	REAR
YAMAHA	Fazer 8	10-	800	REAR
YAMAHA	FZ8	10- 14	800	REAR
YAMAHA	MXT Niken	18-	850	REAR
YAMAHA	MXT Niken GT	19-	850	REAR
YAMAHA	MT-09 (Rad.cal)	14-	900	REAR
YAMAHA	MT-09 SP	18-	900	REAR
YAMAHA	MT-09 Sport Tracker (Rad.cal)	15-	900	REAR
YAMAHA	MT-09 Street Rally (Rad.cal)	14-	900	REAR
YAMAHA	MT-09 Tracer (Rad.cal)	15-	900	REAR
YAMAHA	MT-09 Tracer GT	18-	900	REAR
YAMAHA	XSR	16-	900	REAR
YAMAHA	XSR Abarth	17-	900	REAR
YAMAHA	FZ1 Fazer	06-	1000	REAR
YAMAHA	MT-10	16-	1000	REAR
YAMAHA	MT-10 SP	17-	1000	REAR
YAMAHA	MT-10 Tourer Ed.	17-	1000	REAR
YAMAHA	YZF R1 (Rad.cal)	04- 06	1000	REAR
YAMAHA	YZF R1 (Rad.cal) (4-pad)	07- 14	1000	REAR
YAMAHA	YZF R1 (Rad.cal) (4-pad) ABS	12- 14	1000	REAR
YAMAHA	YZF R1 SP (Rad.cal)	06	1000	REAR

Tipo / *Type* : 3073

Marca / *Brand*	**Vehículo/ Modelo *Vehicle / Model***	**Año /*Year***	**Motor / *Engine***	**Eje / *Axle***
BUELL	Blast	01- 09	500	REAR
BUELL	XB9R Firebolt	02- 10	984	REAR
BUELL	XB9S Lightning	03- 10	984	REAR
BUELL	XB9SX CityX	05- 10	984	REAR
BUELL	M2 Cyclone	98- 02	1200	REAR
BUELL	S1 Lightning	98- 02	1200	REAR
BUELL	S1 Whitelightning	98- 02	1200	REAR
BUELL	S3 Thunderbolt	98- 02	1200	REAR
BUELL	X1 Lightning	01- 02	1200	REAR
BUELL	XB12R Firebolt	04- 08	1200	REAR
BUELL	XB12R Firebolt	09- 10	1200	REAR
BUELL	XB12S Lightning	04- 08	1200	REAR
BUELL	XB12Scg Lightning	06- 08	1200	REAR
BUELL	XB12Scg Lightning	09- 10	1200	REAR
BUELL	XB12Ss Lightning Long	06- 08	1200	REAR
BUELL	XB12Ss Lightning Long	09- 10	1200	REAR
BUELL	XB12STT Super TT	07- 10	1200	REAR
BUELL	XB12X Ulysses	06- 10	1200	REAR
HONDA	FES Pantheon	03- 06	125	REAR
HONDA	FES Pantheon	03- 06	150	REAR
HONDA	CBR Hurricane	87-	250	REAR
HONDA	CBR R, RR	90	250	REAR
HONDA	CBR RJ	88	250	REAR
HONDA	FES Foresight	00- 07	250	REAR
HONDA	NSR R, SP	90	250	REAR
HONDA	NSR RJ	88-	250	REAR

HONDA	RS R	91- 92	250	REAR
HONDA	VT Spada	89	250	REAR
HONDA	VTR	98- 02	250	REAR
HONDA	CB Super Four	92- 95	400	REAR
HONDA	CB-1 (CB 400 F)	89- 90	400	REAR
HONDA	CBR RR	87- 89	400	REAR
HONDA	NTV Bros II	88	400	REAR
HONDA	VFR R	87- 88	400	REAR
HONDA	VRX T Roadstar	95-	400	REAR
HONDA	NX Dominator (Austria)	88- 96	500	REAR
HONDA	XL V,Transalpino	91- 99	600	REAR
HONDA	NTV Bros I	88-98	650	REAR
HONDA	NTV Revere	88- 92	650	REAR
HONDA	NT Hawk GT	88- 91	650	REAR
HONDA	NT V Deauville	98- 00	650	REAR
HONDA	NTV	94-	650	REAR
HONDA	NX Dominator	93- 96	650	REAR
HONDA	NX Dominator J-K	88- 92	650	REAR
HONDA	XL V Transalp	00- 07	650	REAR
HONDA	XRV Africa Twin	88- 89	650	REAR
HONDA	NC S	12- 13	700	REAR
HONDA	NC X	12- 13	700	REAR
HONDA	XL Transalp	08- 11	700	REAR
HONDA	VFR F Interceptor	88- 89	750	REAR
HONDA	XRV Africa Twin	90- 03	750	REAR
MOTO-GUZZI	Quota	92	1000	REAR
SUZUKI	XF Freewind	97- 02	650	REAR
TRIUMPH	Daytona	03- 04	600	REAR
TRIUMPH	Speed Four	03-06	600	REAR

TRIUMPH	TT	00- 03	600	REAR
TRIUMPH	Daytona	05- 06	650	REAR
TRIUMPH	Daytona (Rad.cal)	06- 08	675	REAR
TRIUMPH	Daytona R Triple (Rad.cal)	11- 12	675	REAR
TRIUMPH	Daytona Triple (Rad.cal)	09- 12	675	REAR
TRIUMPH	Street Triple	08- 12	675	REAR
TRIUMPH	Street Triple R	09- 12	675	REAR
TRIUMPH	Tiger	11- 14	800	REAR
TRIUMPH	Tiger XC	11-	800	REAR
TRIUMPH	Tiger XC ABS	12- 14	800	REAR
TRIUMPH	Tiger XCA	15-17	800	REAR
TRIUMPH	Tiger XCA	18-	800	REAR
TRIUMPH	Tiger XCR	15-	800	REAR
TRIUMPH	Tiger XR	15-17	800	REAR
TRIUMPH	Tiger XR	18-	800	REAR
TRIUMPH	Tiger XRT	15-	800	REAR
TRIUMPH	Tiger XRX	15- 17	800	REAR
TRIUMPH	Tiger XRX	18-	800	REAR
TRIUMPH	Tiger XRX Low	18-	800	REAR
TRIUMPH	Daytona from VIN 132513	99-	955	REAR
TRIUMPH	Bonneville Bobber	17-	1200	REAR
TRIUMPH	Bonneville Bobber Black	18-	1200	REAR
TRIUMPH	Bonneville Speedmaster	18-	1200	REAR
YAMAHA	FZ6R	09-	600	REAR
YAMAHA	XJ6 Diversion	09-	600	REAR
YAMAHA	XJ6-F	09- 12	600	REAR
YAMAHA	XJ6-N	09- 12	600	REAR
YAMAHA	XJ6-S	09- 12	600	REAR

Tipo / *Type* : 3077

Marca / *Brand*	Vehículo/ Modelo *Vehicle / Model*	Año /*Year*	Motor / *Engine*	Eje / *Axle*
AJP	PR4 Enduro	04-	125	FRONT
AJP	PR4 Supermotard	04-	125	FRONT
AJP	PR4 Enduro	04-	200	FRONT
AJP	PR4 Supermotard	04-	200	FRONT
MBK	YP Flame X	05-	125	FRONT
SHERCO		02-	125	FRONT
SHERCO	City Corp 4T Enduro	03-	125	FRONT
SHERCO	City Corp 4T SM	03-	125	FRONT
TOMOS	MC T	06-	125	FRONT
TOMOS	SE	05-	125	FRONT
YAMAHA	NXC Cygnus X	05- 09	125	FRONT

Tipo / *Type* : 3078

Marca / *Brand*	Vehículo/ Modelo *Vehicle / Model*	Año /*Year*	Motor / *Engine*	Eje / *Axle*
YAMAHA	YP Majesty	04-15	400	REAR
YAMAHA	XP TMAX	04- 11	500	REAR
YAMAHA	XP TMAX Tech Max	11	500	REAR

Tipo / *Type* : 3079

Marca / *Brand*	Vehículo/ Modelo *Vehicle / Model*	Año /*Year*	Motor / *Engine*	Eje / *Axle*
GILERA	RC Fuoco ie	08-	500	REAR
PIAGGIO VESPA	MP3	06- 07	125	REAR
PIAGGIO VESPA	X8	05-	125	REAR
PIAGGIO VESPA	X8	05-	200	REAR
PIAGGIO VESPA	MP3	06- 07	250	REAR

PIAGGIO VESPA	X8	06-	250	REAR
PIAGGIO VESPA	X9 Left/Rear	05-	250	REAR

Tipo / *Type* : 3080

Marca / *Brand*	**Vehículo/ Modelo *Vehicle / Model***	**Año /*Year***	**Motor / *Engine***	**Eje / *Axle***
MBK	Skycruiser	06-	125	FRONT
YAMAHA	YP X-Max	06- 09	125	FRONT
YAMAHA	YP X-Max	05- 09	250	FRONT

Tipo / *Type* : 3084

Marca / *Brand*	**Vehículo/ Modelo *Vehicle / Model***	**Año /*Year***	**Motor / *Engine***	**Eje / *Axle***
BMW	R 850 C	99- 01	850	REAR
BMW	R 850 GS	99- 07	850	REAR
BMW	R 850 R	96-	850	REAR
BMW	R 850 R	03- 07	850	REAR
BMW	R 850 RT With Integral ABS	01- 06	850	REAR
BMW	S 1000 XR	15- 19	1000	REAR
BMW	S 1000 XR	20-	1000	REAR
BMW	R 1100 GS	99	1100	REAR
BMW	R 1100 R	99-	1100	REAR
BMW	R 1100 RT	95-	1100	REAR
BMW	R 1100 S	99- 00	1100	REAR
BMW	R 1100 S With Integral ABS	01- 05	1100	REAR
BMW	R 1100 S Without Integral	01- 05	1100	REAR
BMW	R 1100 GS	94-	1100	REAR
BMW	R 1150 GS	00- 01	1150	REAR
BMW	R 1150 GS, GS Adventurer	02- 05	1150	REAR

BMW	R 1150 R	01- 06	1150	REAR
BMW	R 1150 R Rockster	03- 05	1150	REAR
BMW	R 1150 RS	01- 04	1150	REAR
BMW	R 1150 RT With Integral ABS	01- 06	1150	REAR
BMW	HP2 Megamoto	06- 08	1200	REAR
BMW	K 1200 R	05- 08	1200	REAR
BMW	K 1200 R Sport	05- 07	1200	REAR
BMW	K 1200 S	05- 08	1200	REAR
BMW	K 1200 C	98- 02	1200	REAR
BMW	R 1200 C Classic	03- 04	1200	REAR
BMW	R 1200 C Independent	03- 04	1200	REAR
BMW	R 1200 C Montauk	02- 04	1200	REAR
BMW	R 1200 GS	04- 12	1200	REAR
BMW	R 1200 GS Tripple Black	11-	1200	REAR
BMW	R 1200 R	07- 14	1200	REAR
BMW	R 1200 RT	06- 13	1200	REAR
BMW	R 1200 S	06- 07	1200	REAR
BMW	R 1200 ST	06- 07	1200	REAR
BMW	K 1300 R	09-	1300	REAR
BMW	K 1300 R Dynamic	11-	1300	REAR
BMW	K 1300 S	09-	1300	REAR

Tipo / *Type* : 3091

Marca / *Brand*	**Vehículo/ Modelo *Vehicle / Model***	**Año /*Year***	**Motor / *Engine***	**Eje / *Axle***
KAWASAKI	Ninja R Right	11-	400	FRONT
KAWASAKI	ER-6f Right	06-	650	FRONT
KAWASAKI	ER-6n Right	06- 16	650	FRONT
KAWASAKI	KLE Versys Right	07- 14	650	FRONT

KAWASAKI	W	99-06	650	FRONT
KAWASAKI	Z Right	04- 06	750	FRONT
KAWASAKI	Z S Right	05- 06	750	FRONT
KAWASAKI	ZR Zephyr Right	96-99	750	FRONT
KAWASAKI	ZR-7 Left/Rear	99-04	750	REAR
KAWASAKI	ZR-7 Right	99-	750	FRONT
KAWASAKI	ZR-7S Left/Rear	01-	750	REAR
KAWASAKI	ZR-7S Right	01-	750	FRONT
KAWASAKI	VN Drifter	99- 02	800	REAR
KAWASAKI	W	11-	800	FRONT
KAWASAKI	W Cafe	19-	800	FRONT
KAWASAKI	W Street	19-	800	FRONT
KAWASAKI	KLV Right	04- 07	1000	FRONT
KAWASAKI	Zephyr Right	97-	1100	FRONT
KAWASAKI	GPZ (ZX 1100) Right	95- 99	1100	FRONT
KAWASAKI	GPZ ABS, Horizont Right	97-	1100	FRONT
KAWASAKI	VN Classic Tourer Fi Right	00-	1500	FRONT
KAWASAKI	VN Classic Tourer Right	98-	1500	FRONT
KAWASAKI	VN Drifter	99- 02	1500	REAR
KAWASAKI	VN Classic Right	03-	1600	FRONT
KAWASAKI	VN Classic Right	09-	1700	FRONT
KAWASAKI	VN Classic Tourer Right	09-	1700	FRONT
SUZUKI	RV VanVan	03-	125	FRONT
SUZUKI	RV VanVan	16-	200	FRONT
SUZUKI	GS	96-	500	FRONT
SUZUKI	GS F	04-	500	FRONT
SUZUKI	GSF Bandit / S Bandit Right	00- 04	600	FRONT
SUZUKI	GSX FW Right	98-	600	FRONT
SUZUKI	DL V-Strom Right	04- 13	650	FRONT

SUZUKI	DL V-Strom Right	17-	650	FRONT
SUZUKI	DL V-Strom XT Right	15- 16	650	FRONT
SUZUKI	DL V-Strom XT Right	17-	650	FRONT
SUZUKI	GSF Bandit / S Bandit Right	05	650	FRONT
SUZUKI	GSF Bandit / S Bandit Right	06	650	FRONT
SUZUKI	SFV Gladius Right	09-	650	FRONT
SUZUKI	SV ,S Right	99- 12	650	FRONT
SUZUKI	SV Right	16-	650	FRONT
SUZUKI	XF Freewind	97- 02	650	FRONT
SUZUKI	GSR Right	11-16	750	FRONT
SUZUKI	GSX FW Right	98- 02	750	FRONT
SUZUKI	GSX Right	98- 08	750	FRONT
SUZUKI	GSX-S Right	15- 16	750	FRONT
SUZUKI	GSX-S Z Right	15- 16	750	FRONT
SUZUKI	C Intruder	05-	800	FRONT
SUZUKI	M Intruder	05-	800	FRONT
SUZUKI	VL Intruder LC Volusia	01- 04	800	FRONT
SUZUKI	VZ Marauder	97- 04	800	FRONT
SUZUKI	DL V-Strom Right	02- 13	1000	FRONT
SUZUKI	GSX G Right	96-	1100	FRONT
SUZUKI	C Intruder Right	05- 10	1500	FRONT
SUZUKI	M Intruder Right	09-	1500	FRONT
SUZUKI	VL Intruder LC Right	02	1500	FRONT
SUZUKI	C R Intruder	08-	1800	REAR
SUZUKI	M R Intruder	06-	1800	REAR
SUZUKI	M R2 Intruder	08-	1800	REAR
SUZUKI	M RBZ Intruder	16-	1800	REAR

Tipo / *Type* : 3092

Marca / *Brand*	**Vehículo/ Modelo *Vehicle / Model***	**Año /*Year***	**Motor / *Engine***	**Eje / *Axle***
KAWASAKI	Ninja R Left/Rear	11-	400	FRONT
KAWASAKI	ER-5	01-	500	FRONT
KAWASAKI	ER-6f Left/Rear	06-	650	FRONT
KAWASAKI	ER-6n Left/Rear	06- 16	650	FRONT
KAWASAKI	KLE Versys Left/Rear	07- 14	650	FRONT
KAWASAKI	KLR 650	95- 04	650	FRONT
KAWASAKI	Z Left/Rear	04- 06	750	FRONT
KAWASAKI	Z S Left/Rear	05- 06	750	FRONT
KAWASAKI	ZR Zephyr Left/Rear	96-	750	FRONT
KAWASAKI	ZR-7 Left/Rear	99-	750	FRONT
KAWASAKI	ZR-7S Left/Rear	01-	750	FRONT
KAWASAKI	VN Classic	98-	800	FRONT
KAWASAKI	VN Drifter	99- 02	800	FRONT
KAWASAKI	VN Classic	06-	900	FRONT
KAWASAKI	VN Classic SE	11-	900	FRONT
KAWASAKI	VN Custom	07-	900	FRONT
KAWASAKI	KLV Left/Rear	04- 07	1000	FRONT
KAWASAKI	Zephyr Left/Rear	97-	1100	FRONT
KAWASAKI	GPZ (ZX 1100) Left/Rear	95- 99	1100	FRONT
KAWASAKI	GPZ ABS, Horizont Left/Rear	97-	1100	FRONT
KAWASAKI	VN Classic	97-	1500	FRONT
KAWASAKI	VN Classic Fi	00-	1500	FRONT
KAWASAKI	VN Classic Tourer Fi	00-	1500	FRONT
KAWASAKI	VN Classic Tourer Left/Rear	98-	1500	FRONT
KAWASAKI	VN Drifter	99- 02	1500	FRONT
KAWASAKI	VN Classic Left/Rear	03-	1600	FRONT

KAWASAKI	VN Classic Left/Rear	09-	1700	FRONT
KAWASAKI	VN Classic Tourer Left/Rear	09-	1700	FRONT
SUZUKI	GSF VS, S Bandit	95-	250	FRONT
SUZUKI	TU X	09-	250	FRONT
SUZUKI	GSF Bandit / S Bandit	00- 04	600	FRONT
SUZUKI	GSX FW Left	98-	600	FRONT
SUZUKI	DL V-Strom Left/Rear	04- 13	650	FRONT
SUZUKI	DL V-Strom Left/Rear	17-	650	FRONT
SUZUKI	DL V-Strom XT Left/Rear	15- 16	650	FRONT
SUZUKI	DL V-Strom XT Left/Rear	17-	650	FRONT
SUZUKI	GSF Bandit / S Bandit	05	650	FRONT
SUZUKI	GSF Bandit / S Bandit	06	650	FRONT
SUZUKI	SFV Gladius Left/Rear	09-	650	FRONT
SUZUKI	SV S Left/Rear	99- 12	650	FRONT
SUZUKI	SV Left/Rear	16-	650	FRONT
SUZUKI	GSR Left/Rear	11-	750	FRONT
SUZUKI	GSX FW Left/Rear	98- 02	750	FRONT
SUZUKI	GSX Left/Rear	98- 08	750	FRONT
SUZUKI	GSX-S Left/Rear	15- 16	750	FRONT
SUZUKI	GSX-S Z Left/Rear	15- 16	750	FRONT
SUZUKI	DR ST Big	96-	800	FRONT
SUZUKI	DL V-Strom Left/Rear	02- 13	1000	FRONT
SUZUKI	GSX G Left/Rear	96-	1100	FRONT
SUZUKI	C Intruder Left/Rear	05- 10	1500	FRONT
SUZUKI	M Intruder Left/Rear	09-	1500	FRONT
SUZUKI	VL Intruder LC Left/Rear	02	1500	FRONT

Tipo / *Type* : 3094

Marca / *Brand*	**Vehículo/ Modelo *Vehicle / Model***	**Año /*Year***	**Motor / *Engine***	**Eje / *Axle***
YAMAHA	TZR	94	125	FRONT
YAMAHA	TZR R	94-	125	FRONT
YAMAHA	TZR	89- 92	250	FRONT
YAMAHA	FZR R	91-	400	FRONT
YAMAHA	XP TMAX	08- 11	500	FRONT
YAMAHA	XP TMAX Tech Max	11	500	FRONT
YAMAHA	XP TMAX	12-	530	FRONT
YAMAHA	XP TMAX DX	17-	530	FRONT
YAMAHA	XP TMAX Iron Max	15-	530	FRONT
YAMAHA	XP TMAX SX	17-	530	FRONT
YAMAHA	FZ6 Fazer S2	07-	600	FRONT
YAMAHA	FZ6 Fazer S2 ABS	07-	600	FRONT
YAMAHA	FZ6 S2	07-	600	FRONT
YAMAHA	FZ6 S2 ABS	07-	600	FRONT
YAMAHA	FZS Fazer	98- 03	600	FRONT
YAMAHA	FZS S Fazer	01- 03	600	FRONT
YAMAHA	YZF R Thunder Cat	96- 03	600	FRONT
YAMAHA	YZF R6	99- 04	600	FRONT
YAMAHA	YZF R6 (Rad.cal)	05- 16	600	FRONT
YAMAHA	YZF R6 (Rad.cal)	17-	600	FRONT
YAMAHA	MT-07	14-	700	FRONT
YAMAHA	MT-07 Moto Cage	15-	700	FRONT
YAMAHA	MT-07 SP	18-	700	FRONT
YAMAHA	MT-07 Tracer	16- 18	700	FRONT
YAMAHA	MT-07 Tracer GT	18- 19	700	FRONT
YAMAHA	MT-07 Tracer	20-	700	FRONT

YAMAHA	XSR	16-	700	FRONT
YAMAHA	XSR Xtribute	19-	700	FRONT
YAMAHA	YZF R7 OW02	99- 02	750	FRONT
YAMAHA	Fazer 8	10-16	800	FRONT
YAMAHA	FZ8	10- 14	800	FRONT
YAMAHA	MXT Niken	18-19	850	FRONT
YAMAHA	MXT Niken GT	19-	850	FRONT
YAMAHA	MT-09 (Rad.cal)	14-	900	FRONT
YAMAHA	MT-09 SP	18-	900	FRONT
YAMAHA	MT-09 Sport Tracker (Rad.cal)	15-	900	FRONT
YAMAHA	MT-09 Street Rally (Rad.cal)	14-	900	FRONT
YAMAHA	MT-09 Tracer (Rad.cal)	15-	900	FRONT
YAMAHA	MT-09 Tracer GT	18-	900	FRONT
YAMAHA	TDM	02- 14	900	FRONT
YAMAHA	XSR	16-	900	FRONT
YAMAHA	XSR Abarth	17-	900	FRONT
YAMAHA	FZ1 Fazer	06-	1000	FRONT
YAMAHA	FZS Fazer	01- 05	1000	FRONT
YAMAHA	MT-10	16-	1000	FRONT
YAMAHA	MT-10 SP	17-	1000	FRONT
YAMAHA	YZF R Thunder Ace	96- 99	1000	FRONT
YAMAHA	YZF R1	98- 03	1000	FRONT
YAMAHA	YZF R1 (Rad.cal)	04- 06	1000	FRONT
YAMAHA	YZF R1 (Rad.cal)	15-	1000	FRONT
YAMAHA	YZF R1 SP (Rad.cal)	06	1000	FRONT
YAMAHA	YZF R1M (Rad.cal)	15-	1000	FRONT
YAMAHA	YZF R1S (Rad.cal)	16-	1000	FRONT
YAMAHA	BT Bulldog	02- 06	1100	FRONT
YAMAHA	XT ZE Super Tenere Raid Ed.	18-	1200	FRONT

YAMAHA	XTZ Super Tenere	10-	1200	FRONT
YAMAHA	XTZ Super Tenere ZE	14-	1200	FRONT
YAMAHA	FJR	01- 03	1300	FRONT
YAMAHA	FJR ABS	03- 05	1300	FRONT
YAMAHA	XJR	99-	1300	FRONT
YAMAHA	XJR Racer	15-	1300	FRONT
YAMAHA	XJR SP	01	1300	FRONT
YAMAHA	MT-01 (Rad.cal)	05- 06	1700	FRONT
YAMAHA	XV PC Road Star Warrior	03- 07	1700	FRONT
YAMAHA	XV Road Star Warrior	02	1700	FRONT
YAMAHA	XV A Midnight Star	06- 10	1900	FRONT

Tipo / *Type* : 3098

Marca / *Brand*	**Vehículo/ Modelo *Vehicle / Model***	**Año /*Year***	**Motor / *Engine***	**Eje / *Axle***
APRILIA	RS	06- 12	125	FRONT
APRILIA	SL Shiver GT, ABS	09- 12	750	FRONT
APRILIA	SL Shiver, ABS	07- 18	750	FRONT
APRILIA	SMV Dorsoduro	09- 18	750	FRONT
APRILIA	NA Mana	07	850	FRONT
APRILIA	NA Mana GT, ABS	09- 13	850	FRONT
APRILIA	NA Mana, ABS	08- 11	850	FRONT
APRILIA	Dorsoduro	17-	900	FRONT
APRILIA	Shiver	17-	900	FRONT
KYMCO	Xciting i	12-	400	FRONT
SYM	Maxsym	11	400	FRONT
YAMAHA	MT	14-	125	FRONT
YAMAHA	YZF R	14-	125	FRONT

Tipo / *Type* : 3097

Marca / *Brand*	**Vehículo/ Modelo *Vehicle / Model***	**Año /*Year***	**Motor / *Engine***	**Eje / *Axle***
PIAGGIO	Medley	16-	125	REAR
PIAGGIO	Medley S	17-	125	REAR
PIAGGIO	MP3 Efi	08- 11	125	REAR
PIAGGIO	MP3 Hybrid	09- 12	125	REAR
PIAGGIO	MP3 Yourban	11- 12	125	REAR
PIAGGIO	X10 Executive Left/Rear	13-	125	REAR
PIAGGIO	X10 Executive Right	13-	125	FRONT
PIAGGIO	X7	08-	125	REAR
PIAGGIO	X9 Evolution Right	06-	125	FRONT
PIAGGIO	X9 Right	04-	125	FRONT
PIAGGIO	Xevo	08-	125	REAR
PIAGGIO	Medley	16-	150	REAR
PIAGGIO	MP3 Efi	08- 09	250	REAR
PIAGGIO	MP3 LT iE	09	250	REAR
PIAGGIO	X7	08-	250	REAR
PIAGGIO	X9 Right	05-	250	FRONT
PIAGGIO	Xevo	08-	250	REAR
PIAGGIO	Beverly i.e.	11-	300	REAR
PIAGGIO	MP3 Hybrid	11-	300	REAR
PIAGGIO	MP3 Hybrid iE	11-	300	REAR
PIAGGIO	MP3 iE	10-	300	REAR
PIAGGIO	MP3 LT	13-	300	REAR
PIAGGIO	MP3 LT Business	13-	300	REAR
PIAGGIO	MP3 LT iE ABS	14-	300	REAR
PIAGGIO	MP3 LT Sport ABS	14-	300	REAR
PIAGGIO	MP3 LT Touring	11- 12	300	REAR

PIAGGIO	MP3 Touring	11- 12	300	REAR
PIAGGIO	MP3 Yourban iE	11-	300	REAR
PIAGGIO	X7 Evo i.e.	11-	300	REAR
PIAGGIO	Beverly S	14-	350	REAR
PIAGGIO	Beverly Sport Touring ie	12-	350	REAR
PIAGGIO	Beverly Sport Touring ie ABS	12-	350	REAR
PIAGGIO	X10 Executive Left/Rear	13-	350	REAR
PIAGGIO	X10 Executive Right	13-	350	FRONT
PIAGGIO	BV	12-	350	REAR
PIAGGIO	X8 Right	07-	400	FRONT
PIAGGIO	Xevo Right	08-	400	FRONT
PIAGGIO	X10 Executive Left/Rear	13-	500	REAR
PIAGGIO	X10 Executive Right	13-	500	FRONT

Tipo / *Type* : 3100

Marca / *Brand*	**Vehículo/ Modelo *Vehicle / Model***	**Año /*Year***	**Motor / *Engine***	**Eje / *Axle***
DAELIM	S From VIN SDC007441	17-	125	REAR
DAELIM	ST Sector Quad	05- 06	250	REAR
DAELIM	S	17-	300	REAR
E-TON	RXL Viper	07-	150	REAR
E-TON	VXL ST Vector	06-	250	REAR
E-TON	VTX ST Vortex	07-	300	REAR
E-TON	VXL ST Vector	07-	300	REAR
PEUGEOT	LXR	10-	125	REAR
PEUGEOT	LXR	10-	200	REAR
SYM	Joymax Sport	16-	125	REAR
SYM	Joyride	07- 09	125	REAR
SYM	Joyride Evo	10-	125	REAR

SYM	Joyride S	16-	125	REAR
SYM	HD Evo DT	10-	125	REAR
SYM	HD2 Evo	14-	125	REAR
SYM	SB Wolf Ni	11-	125	FRONT
SYM	Joyride S	16-	200	REAR
SYM	HD Evo	07-	200	REAR
SYM	HD2 Evo	14-	200	REAR
SYM	Quadlander	12-	200	REAR
SYM	Trackrunner	05- 08	200	REAR
SYM	GTS	07-	250	REAR
SYM	Joymax	07-	250	REAR
SYM	Joymax Sport	16-	250	REAR
SYM	RV Efi	10-	250	REAR
SYM	Quadlander	06- 07	250	REAR
SYM	City Max	06- 07	300	REAR
SYM	Cruisym	17-	300	REAR
SYM	Joymax Evo	10-	300	REAR
SYM	Joymax Sport	16-	300	REAR
SYM	Joyride Evo i	10-	300	REAR
SYM	GTS	09-	300	REAR
SYM	GTS Evo i	11-	300	REAR
TGB	X-Large	11-	125	REAR
TGB	X-Motion	08-	125	REAR
TGB	X-Motion	08-	250	REAR
TGB	X-Motion	10-	300	REAR

Tipo / *Type* : 3102

Marca / *Brand*	**Vehículo/ Modelo *Vehicle / Model***	**Año /*Year***	**Motor / *Engine***	**Eje / *Axle***
KYMCO	G-Dink	12-	125	REAR
KYMCO	K-XCTi	14-	125	REAR
KYMCO	S People	05-	125	REAR
KYMCO	S People	05-	200	REAR
KYMCO	Xciting	06-	250	REAR
KYMCO	S People Left/Rear	06-	250	REAR
KYMCO	G-Dink	12-	300	REAR
KYMCO	K-XCTi	12-	300	REAR
KYMCO	People Si Left/Rear	08-	300	REAR
KYMCO	Xciting Ri	08-	300	REAR
YAMAHA	YP 400 R X-Max	13-	400	REAR
YAMAHA	YP 400 RA X-Max	14-	400	REAR

Tipo / *Type* : 3103

Marca / *Brand*	**Vehículo/ Modelo *Vehicle / Model***	**Año /*Year***	**Motor / *Engine***	**Eje / *Axle***
KAWASAKI	J	16-	125	REAR
KAWASAKI	J	14-	300	REAR
KYMCO	Downtown i	10-	125	REAR
KYMCO	New Downtown	16-	125	REAR
KYMCO	People GTi	12-	125	REAR
KYMCO	Super Dink	10-	125	REAR
KYMCO	X-Town	16-	125	REAR
KYMCO	Downtown i	10-	200	REAR
KYMCO	People GTi	12-	200	REAR
KYMCO	Downtown i	10-	300	REAR

KYMCO	People GTi	12-	300	REAR
KYMCO	X-Town	16-	300	REAR
KYMCO	New Downtown	16-	350	REAR

Tipo / *Type* : 3104

Marca / *Brand*	**Vehículo/ Modelo *Vehicle / Model***	**Año /*Year***	**Motor / *Engine***	**Eje / *Axle***
SUZUKI	AN Burgman Left/Rear	07- 16	400	REAR
SUZUKI	AN Burgman Left/Rear	17-	400	REAR
SUZUKI	AN A Burgman Executive	04- 12	650	REAR
SUZUKI	AN Burgman	02-	650	REAR
SUZUKI	AN Z Burgman Executive	13-	650	REAR

Tipo / *Type* : 3107

Marca / *Brand*	**Vehículo/ Modelo *Vehicle / Model***	**Año /*Year***	**Motor / *Engine***	**Eje / *Axle***
APRILIA	RSV Factory Pista (Rad.cal)	04-	1000	FRONT
APRILIA	RSV Mille	02- 03	1000	FRONT
APRILIA	RSV Mille Nera (Rad.cal)	04-	1000	FRONT
APRILIA	RSV Mille R	01- 02	1000	FRONT
APRILIA	RSV Mille R	04	1000	FRONT
APRILIA	RSV Mille R (Rad.cal)	03	1000	FRONT
APRILIA	RSV Mille R (Rad.cal)	05-	1000	FRONT
APRILIA	RSV Mille R Factory (Rad.cal)	04-	1000	FRONT
APRILIA	RSV Tuono R	03	1000	FRONT
APRILIA	RSV Tuono R Factory, ABS	06-	1000	FRONT
BENELLI	BX 449 Supermotard	08-	449	FRONT
BENELLI	TRK (Rad.cal)	18-	502	FRONT
BENELLI	BX 570 Supermotard	08-	570	FRONT
BENELLI	BN	14-	600	FRONT

BENELLI	BN GT	14-	600	FRONT
BENELLI	S	18-	752	FRONT
BENELLI	Due	07- 09	756	FRONT
BENELLI	TnT Century Racer	11-	899	FRONT
BENELLI	Tornado TRE	03- 06	900	FRONT
BENELLI	Tornado TRE RS (Rad.cal)	04- 06	900	FRONT
BENELLI	TnT Cafe Racer	05-	1130	FRONT
BENELLI	TnT Century Racer	11-	1130	FRONT
BENELLI	TnT Officine	07-	1130	FRONT
BENELLI	TnT Sport	05-	1130	FRONT
BENELLI	TnT Titanium	05-	1130	FRONT
BIMOTA	DB5 Mille (Rad.cal)	05- 11	1000	FRONT
BIMOTA	DB5 S (Rad.cal)	07- 11	1000	FRONT
BIMOTA	DB6 Delirio (Rad.cal)	07-	1000	FRONT
BIMOTA	SB8K Santamonica	07-	1000	FRONT
BIMOTA	DB10 Bimotard	12-	1078	FRONT
BIMOTA	DB5 RE	12-	1078	FRONT
BIMOTA	DB7 (Rad.cal)	08	1098	FRONT
BIMOTA	3D Tesi (Rad.cal)	07-	1100	FRONT
BIMOTA	DB6R Delirio (Rad.cal)	08-	1100	FRONT
BIMOTA	DB12	12-	1200	FRONT
BIMOTA	DB9 Brivido	12-	1200	FRONT
BMW	G 450 SMR	09- 10	450	FRONT
CAGIVA	X3 Raptor	03-	1000	FRONT
CAGIVA	X-Raptor	04-	1000	FRONT
DERBI	Mulhacen	06- 07	659	FRONT
DERBI	Mulhacen Cafe	08-	659	FRONT
DUCATI	748 R	01- 02	748	FRONT
DUCATI	749 S	03- 07	749	FRONT

DUCATI	749 R (Rad.cal)	04- 07	749	FRONT
DUCATI	996 R	01	996	FRONT
DUCATI	Monster S4RS	06	996	FRONT
DUCATI	999 S	03- 07	999	FRONT
DUCATI	Monster S4R	07-	999	FRONT
DUCATI	Monster S4RS	07-	999	FRONT
DUCATI	999 R (Rad.cal)	02- 07	999	FRONT
DUCATI	Hypermotard 1100	06-09	1078	FRONT
GILERA	Supersport	02-	600	FRONT
HUSQVARNA	SMR	11-	449	FRONT
HUSQVARNA	SM R	05	450	FRONT
HUSQVARNA	SM R	06-	450	FRONT
HUSQVARNA	SM RR	06-	450	FRONT
HUSQVARNA	SM Centennial	06-	510	FRONT
HUSQVARNA	SM R	05-	510	FRONT
HUSQVARNA	SMR	11-	511	FRONT
HUSQVARNA	SM 610 ie	07-	610	FRONT
HUSQVARNA	SM 630	10-	630	FRONT
HUSQVARNA	STR CRC	07-	650	FRONT
HUSQVARNA	SM Supermoto	15-	701	FRONT
HYOSUNG	RX SM	08-	450	FRONT
KTM	Duke	08- 11	690	FRONT
KTM	Duke R	10- 11	690	FRONT
KTM	SM	07-	690	FRONT
KTM	SMC	08-	690	FRONT
KTM	Supermoto R	08-	690	FRONT
KTM	SM	05-	950	FRONT
KTM	SM R	07-	950	FRONT
KTM	Super Duke	04- 13	990	FRONT

KTM	Super Duke R	09- 13	990	FRONT
KTM	Supermoto	07- 11	990	FRONT
KTM	Supermoto T	09-	990	FRONT
LAVERDA	SFC (Rad.cal)	04-	1000	FRONT
MONDIAL	EVO (Rad.cal)	04-	1000	FRONT
MONDIAL	Piega	03-	1000	FRONT
MONDIAL	RZ Nuda	04-	1000	FRONT
MONDIAL	Starfighter (Rad.cal)	04-	1000	FRONT
MOTO-GUZZI	MGS-01 Corsa (Rad.cal)	05-	1200	FRONT
MOTO-MORINI	Granferro	10-	1200	FRONT
MV AGUSTA	F4 R	06- 07	1000	FRONT
NORTON	Commando Cafe Racer	11-	961	FRONT
NORTON	Commando SE	12-	961	FRONT
NORTON	Commando SF	13-	961	FRONT
SHERCO	SM 4.5i Supermotard	06-	450	FRONT
SWM	Gran Milano	15-	440	FRONT
SWM	SM R	15-	500	FRONT
SWM	SM Superdual	15-	650	FRONT
TM	SMM	07- 16	125	FRONT
TM	SMR	08- 16	125	FRONT
TM	SMR	08- 16	250	FRONT
TM	SMM F	07- 16	450	FRONT
TM	SMR F	08- 16	450	FRONT
TM	SMX F	04- 16	450	FRONT
TM	SMM F	07- 16	530	FRONT
TM	SMR F	08- 16	530	FRONT
TM	SMX F	04- 16	530	FRONT
TM	SMX F	04- 10	660	FRONT
TRIUMPH	Speed 94	15-	1050	FRONT

TRIUMPH	Speed Triple (Rad.cal)	08- 15	1050	FRONT

Tipo / *Type* : 3112

Marca / *Brand*	**Vehículo/ Modelo *Vehicle / Model***	**Año /*Year***	**Motor / *Engine***	**Eje / *Axle***
HONDA	CB Hornet (Japan)	98- 99	600	FRONT
HONDA	CBR F4, F4 Sport	99- 06	600	FRONT
HONDA	CBR RR	03- 04	600	FRONT
HONDA	CBR RR Fireblade	98- 03	900	FRONT
HONDA	VTR SP-1, SP-2	00- 06	1000	FRONT
HONDA	CB EX	14- 16	1100	FRONT
HONDA	CB EX	17-	1100	FRONT
HONDA	CB	05-	1300	FRONT
HONDA	CB R	02- 04	1300	FRONT
HYOSUNG	GD EXIV	12-	125	FRONT
HYOSUNG	GD EXIV-R	15-	250	FRONT
HYOSUNG	GT iR	15-	250	FRONT
HYOSUNG	GV	17-	250	FRONT
HYOSUNG	GT R	16-	300	FRONT
HYOSUNG	GV	16-	300	FRONT
HYOSUNG	GT i	13-	650	FRONT
HYOSUNG	GT i Naked	15-	650	FRONT
HYOSUNG	GT iR	13-	650	FRONT
HYOSUNG	ST	11-	700	FRONT
HYOSUNG	ST i Deluxe	13-	700	FRONT

Tipo / *Type* : 3116

Marca / *Brand*	**Vehículo/ Modelo *Vehicle / Model***	**Año /*Year***	**Motor / *Engine***	**Eje / *Axle***
HONDA	CBR RR (Rad.cal)	05-	600	FRONT
HONDA	CBR RR (Rad.cal) ABS	09-	600	FRONT
HONDA	VFR F	14-	800	FRONT
HONDA	VFR X Crossrunner	15-	800	FRONT
HONDA	CB R (Rad.cal)	08-	1000	FRONT
HONDA	CBR RR Fireblade (Rad.cal)	04- 08	1000	FRONT
HONDA	CBR RR Fireblade (Rad.cal)	09-	1000	FRONT

Tipo / *Type* : 3117

Marca / *Brand*	**Vehículo/ Modelo *Vehicle / Model***	**Año /*Year***	**Motor / *Engine***	**Eje / *Axle***
KAWASAKI	Z RS	18-	900	FRONT
KAWASAKI	Z RS Cafe	18-	900	FRONT
KAWASAKI	Z (Rad.cal)	10- 16	1000	FRONT
KAWASAKI	Z (Rad.cal) ABS	15-	1000	FRONT
KAWASAKI	Z SE (Rad.cal)	14- 16	1000	FRONT
KAWASAKI	Z SX (Rad.cal)	11- 16	1000	FRONT
KAWASAKI	Z SX (Rad.cal)	17-	1000	FRONT
KAWASAKI	ZX H2 SX	18-	1000	FRONT
KAWASAKI	ZX H2 SX SE	18-	1000	FRONT
KAWASAKI	ZX-10R Ninja (Rad.cal)	08- 15	1000	FRONT
KAWASAKI	ZX-10R Ninja (Rad.cal) ABS	12- 15	1000	FRONT
SUZUKI	GSX-R (Rad.cal)	04- 10	600	FRONT
SUZUKI	GSX-R (Rad.cal)	04- 10	750	FRONT
SUZUKI	DL V-Strom	14- 16	1000	FRONT
SUZUKI	DL V-Strom	17-	1000	FRONT

SUZUKI	DL V-Strom XT	17-	1000	FRONT
SUZUKI	DL V-Strom XT Adventure	19-	1000	FRONT
SUZUKI	GSX-R (Rad.cal)	04- 11	1000	FRONT
SUZUKI	GSX-R Hayabusa	08- 12	1300	FRONT
SUZUKI	M R Intruder	06-	1800	FRONT
SUZUKI	M R2 Intruder	08-	1800	FRONT
SUZUKI	M RBZ Intruder	16-	1800	FRONT

Tipo / *Type* : 3123

Marca / *Brand*	**Vehículo/ Modelo *Vehicle / Model***	**Año /*Year***	**Motor / *Engine***	**Eje / *Axle***
BMW	R 850 RT With Integral ABS	01- 06	850	FRONT
BMW	R 1100 S Without Integral	01- 05	1100	FRONT
BMW	R 1150 GS, GS Adventurer	02- 05	1150	FRONT
BMW	R 1150 RT With Integral ABS	01- 06	1150	FRONT
BMW	HP2 Megamoto	06- 08	1200	FRONT
BMW	K 1200 GT (K41) with Integral	02- 05	1200	FRONT
BMW	K 1200 GT (K41) with Integral	04- 08	1200	FRONT
BMW	K 1200 RS	01- 05	1200	FRONT
BMW	K 1200 S	05- 08	1200	FRONT
BMW	R 1200 GS	04- 12	1200	FRONT
BMW	R 1200 GS Tripple Black	11-	1200	FRONT
BMW	R 1200 RT	06- 13	1200	FRONT
BMW	R 1200 S	06- 07	1200	FRONT
BMW	R 1200 ST	06- 07	1200	FRONT
BMW	K 1300 GT	09- 10	1300	FRONT
BMW	K 1300 S	09-	1300	FRONT

Tipo / *Type* : 3127

Marca / *Brand*	**Vehículo/ Modelo *Vehicle / Model***	**Año /*Year***	**Motor / *Engine***	**Eje / *Axle***
MZ	(MUZ) S	03-	1000	FRONT
MZ	(MUZ) SF	05-	1000	FRONT
MZ	(MUZ) SFX	07-	1000	FRONT
MZ	(MUZ) SN	05-	1000	FRONT
MZ	(MUZ) ST	07-	1000	FRONT
SUZUKI	RGV 400 (V4 2 Stroke)	88	400	FRONT
SUZUKI	GSX-R	90- 95	400	FRONT
SUZUKI	GSX-R	92- 93	600	FRONT
SUZUKI	GSX-R	88- 93	750	FRONT
SUZUKI	RF RR,RS,RS2,T,V	94- 97	900	FRONT
SUZUKI	GSX Katana	93-	1100	FRONT
SUZUKI	GSX-R	89- 92	1100	FRONT
SUZUKI	GSF Bandit	95- 96	1200	FRONT
SUZUKI	GSF Bandit	97- 00	1200	FRONT
TRIUMPH	Daytona	03- 04	600	FRONT
TRIUMPH	Speed Four	03- 06	600	FRONT
TRIUMPH	TT	00- 03	600	FRONT
TRIUMPH	Daytona	05- 06	650	FRONT
TRIUMPH	Daytona	91- 92	750	FRONT
TRIUMPH	Daytona	91- 94	900	FRONT
TRIUMPH	Daytona Srpint	94-	900	FRONT
TRIUMPH	Speed Triple	94- 96	900	FRONT
TRIUMPH	Trophy	96-	900	FRONT
TRIUMPH	T509 Speed Triple	97- 01	900	FRONT
TRIUMPH	T595 Daytona	96- 98	950	FRONT
TRIUMPH	Daytona Centennial	02-	955	FRONT

TRIUMPH	Daytona from VIN 132513	99-	955	FRONT
TRIUMPH	Daytona to VIN 132512	99-	955	FRONT
TRIUMPH	Speed Triple	99-	955	FRONT
TRIUMPH	Sprint RS	00-	955	FRONT
TRIUMPH	Sprint ST	99- 04	955	FRONT
TRIUMPH	Daytona	92	1000	FRONT
TRIUMPH	Sprint GT ABS	11-	1050	FRONT
TRIUMPH	Sprint ST	05- 11	1050	FRONT
TRIUMPH	Daytona	91-	1200	FRONT
TRIUMPH	Tiger Explorer	12-	1200	FRONT
TRIUMPH	Trophy	96- 03	1200	FRONT
TRIUMPH	Thunderbird	09-	1600	FRONT
TRIUMPH	Thunderbird Commander	14-	1700	FRONT
TRIUMPH	Thunderbird LT	14-	1700	FRONT
TRIUMPH	Thunderbird Storm	11-	1700	FRONT
TRIUMPH	Rocket III	04-	2300	FRONT
TRIUMPH	Rocket III Classic	07-	2300	FRONT
TRIUMPH	Rocket III Roadster	10-	2300	FRONT
TRIUMPH	Rocket III Touring	13-	2300	FRONT
TRIUMPH	Rocket X	15-	2300	FRONT
YAMAHA	TZ	97-	125	FRONT
YAMAHA	TZ (Rad.cal)	02-	250	FRONT
YAMAHA	TZ	90- 01	250	FRONT
YAMAHA	FZR R	89- 92	750	FRONT

Tipo / *Type* : 3129

Marca / *Brand*	**Vehículo/ Modelo *Vehicle / Model***	**Año /*Year***	**Motor / *Engine***	**Eje / *Axle***
HONDA	Crossrunner	11-	800	REAR
HONDA	VFR F	14- 16	800	REAR
HONDA	VFR X Crossrunner	15- 16	800	REAR
HONDA	VFR F	17-	800	REAR
HONDA	VFR X Crossrunner	17-	800	REAR
HONDA	CB R (Rad.cal)	08-	1000	REAR
HONDA	CB R ABS	08-	1000	REAR
HONDA	CB R+	18-	1000	REAR
HONDA	CB R+ Neo Sports Cafe	18-	1000	REAR
HONDA	VFR F	10-	1200	REAR

Tipo / *Type* : 3131

Marca / *Brand*	**Vehículo/ Modelo *Vehicle / Model***	**Año /*Year***	**Motor / *Engine***	**Eje / *Axle***
SUZUKI	GSR	06- 10	600	REAR
SUZUKI	GSX-R (Rad.cal)	06- 10	600	REAR
SUZUKI	GSX-R (Rad.cal)	06- 10	750	REAR
SUZUKI	DL V-Strom	14- 16	1000	REAR
SUZUKI	DL V-Strom	17-	1000	REAR
SUZUKI	DL V-Strom XT	17-	1000	REAR
SUZUKI	DL V-Strom XT Adventure	19-	1000	REAR
SUZUKI	GSX-R (Rad.cal)	07- 08	1000	REAR
SUZUKI	GSX-R Hayabusa	08- 12	1300	REAR
SUZUKI	GSX-R Hayabusa (Rad.cal)	13-	1300	REAR
SUZUKI	B-King	08-	1340	REAR

Tipo / *Type* : 3133

Marca / *Brand*	**Vehículo/ Modelo *Vehicle / Model***	**Año /*Year***	**Motor / *Engine***	**Eje / *Axle***
ADLY	Cross X Over	07-	300	FRONT
ADLY	Cross X Road	07-	300	FRONT
ADLY	ATV Sport	07-	300	FRONT
ADLY	S	07-	320	FRONT
ADLY	U	07-	320	FRONT
ARCTIC CAT	DVX	06- 09	250	FRONT
ARCTIC CAT	DVX	09-	300	FRONT
CAN-AM	DS	08-	250	FRONT / REAR
CECTEK	EFI Gladiator	09-	500	FRONT
CPI	XS ATV	07-	250	FRONT
HERCULES	ATV	07-	280	FRONT
HERCULES	ATV Sport	07-	300	FRONT
INDIAN	Scout Sixty	16	1000	REAR
INDIAN	Scout	15- 16	1130	REAR
KAWASAKI	KVF Brute Force	13-	300	REAR
KYMCO	MXU	06-	250	FRONT
KYMCO	Urban Quad	06-	250	FRONT
KYMCO	KXR	04-	250	FRONT
KYMCO	Maxxer	06-	300	FRONT
KYMCO	Maxxer Supermoto	15-	300	FRONT
KYMCO	MXU	06-	300	FRONT / REAR
KYMCO	MXU	06- 08	500	FRONT / REAR
KYMCO	UXV 4x4	08-	500	FRONT / REAR
PGO	Bug	08-	500	REAR
PGO	BR i Racer	07-	500	REAR
SYM	SB Wolf Ni	11-	125	REAR

SYM	Quadlander	12-	200	FRONT
SYM	Trackrunner	05- 08	200	FRONT
SYM	Quadlander	06- 07	250	FRONT
SYM	SN Ni Wolf	14-	250	REAR
SYM	City Max	06- 07	300	FRONT
SYM	Quadlander	06-	300	FRONT / REAR
SYM	Wolf Cafe Racer	15-	300	REAR
SYM	Wolf Classic	15-	300	REAR
SYM	SB Cafe Racer	16-	300	REAR
SYM	Quad Raider	08-	600	FRONT / REAR
YAMAHA	MT 125	14-	125	REAR
YAMAHA	YZF 125 R	08-	125	REAR

Tipo / *Type* : 3136

Marca / *Brand*	**Vehículo/ Modelo *Vehicle / Model***	**Año /*Year***	**Motor / *Engine***	**Eje / *Axle***
HONDA	NS	89	125	FRONT
HONDA	NS	89	250	FRONT
HONDA	NSR R, SP	90	250	FRONT
HONDA	NSR RJ	88-	250	FRONT
HONDA	RS R	91- 92	250	FRONT
HONDA	NTV Bros II	88	400	FRONT
HONDA	VRF RR (NC35)	90- 96	400	FRONT
HONDA	VFR R	89- 92	400	FRONT
HONDA	VTR R (NC 30)	90	400	FRONT
HONDA	NTV Bros I	88-	600	FRONT
HONDA	NTV Bros	88- 97	650	FRONT
HONDA	NR (V8 Oval pistons)	92-	750	FRONT
HONDA	RVF RR (RC-45)	94- 98	750	FRONT

HONDA	VFR R	88- 93	750	FRONT
HONDA	CB Hornet	02- 07	900	FRONT
HONDA	CBR RR Fireblade	92- 97	900	FRONT
HONDA	CB F (Big One)	93- 97	1000	FRONT
HONDA	VTR F Firestorm	97- 07	1000	FRONT
HONDA	CB X-4	97- 03	1300	FRONT

Tipo / *Type* : 3137

Marca / *Brand*	**Vehículo/ Modelo *Vehicle / Model***	**Año /*Year***	**Motor / *Engine***	**Eje / *Axle***
HARLEY DAVIDSON	XL L Super Low	14-	883	REAR
HARLEY DAVIDSON	XL N Iron	14-	883	REAR
HARLEY DAVIDSON	XL R Roadster	14-	883	REAR
HARLEY DAVIDSON	XL C, CA, CB, CP Custom	14-	1200	REAR
HARLEY DAVIDSON	XL CX	17-	1200	REAR
HARLEY DAVIDSON	XL Iron	18-	1200	REAR
HARLEY DAVIDSON	XL Roadstrer	18-	1200	REAR
HARLEY DAVIDSON	XL T Super Low	15-	1200	REAR
HARLEY DAVIDSON	XL V Seventy-two	14-	1200	REAR
HARLEY DAVIDSON	XL X Forty-Eight	14-	1200	REAR
HARLEY DAVIDSON	XL X Forty-Eight Spec.	19-	1200	REAR
HONDA	VT C2S ABS	13-	750	REAR
HONDA	VT CS ABS	13-	750	REAR
HONDA	CB R	02- 04	1300	REAR
HONDA	CB SF	98- 00	1300	REAR
HONDA	CB X-4	97- 03	1300	REAR
KAWASAKI	ZX-7RR Ninja	96- 02	750	REAR
KAWASAKI	GTR (Rad.cal)	07-	1400	REAR
KAWASAKI	GTR (Rad.cal) ABS	07-	1400	REAR

KAWASAKI	ZZR (Rad.cal)	06- 14	1400	REAR
KAWASAKI	ZZR (Rad.cal) ABS	06- 14	1400	REAR
KAWASAKI	ZZR Performance Sport	17-	1400	REAR
KAWASAKI	ZZR SE	16-	1400	REAR
MZ	(MUZ) S	03-	1000	REAR
MZ	(MUZ) SF	05-	1000	REAR
MZ	(MUZ) SFX	07-	1000	REAR
MZ	(MUZ) SN	05-	1000	REAR
MZ	(MUZ) ST	07-	1000	REAR
SUZUKI	GSX-R (Rad.cal)	04- 05	600	REAR
SUZUKI	GSF Bandit / S Bandit	05	650	REAR
SUZUKI	GSX-R (Rad.cal)	04- 05	750	REAR
SUZUKI	GSX-R (Rad.cal)	03- 06	1000	REAR
SUZUKI	GSX-R	01- 02	1000	REAR
SUZUKI	GSX	02- 07	1400	REAR

Tipo / *Type* : 3139

Marca / *Brand*	**Vehículo/ Modelo *Vehicle / Model***	**Año /*Year***	**Motor / *Engine***	**Eje / *Axle***
HYOSUNG	GV 650 Aguila	04- 05	650	REAR
YAMAHA	TDM	02- 14	900	REAR
YAMAHA	SCR Scrambler	17-	950	REAR
YAMAHA	XV Bolt	14-	950	REAR
YAMAHA	XV Bolt C-Spec	15-	950	REAR
YAMAHA	XV Bolt Racer	17-	950	REAR
YAMAHA	XV Bolt R-Spec	14-	950	REAR
YAMAHA	XVS A Midnight Star	09-	950	REAR
YAMAHA	XTZ Super Tenere	10-	1200	REAR
YAMAHA	XTZ Super Tenere ZE	14-	1200	REAR

YAMAHA	XT ZE Super Tenere Raid Ed.	18-	1200	REAR
YAMAHA	FJR	01- 03	1300	REAR
YAMAHA	FJR A	13- 15	1300	REAR
YAMAHA	FJR A	16-	1300	REAR
YAMAHA	FJR ABS	03- 12	1300	REAR
YAMAHA	FJR AE	16-	1300	REAR
YAMAHA	FJR AS	13- 15	1300	REAR
YAMAHA	FJR AS	16-	1300	REAR
YAMAHA	XVS A Midnight Star	07-16	1300	REAR
YAMAHA	XVS Custom	14-	1300	REAR
YAMAHA	XVS Stryker	11-	1300	REAR
YAMAHA	VMX V-Max	09-	1700	REAR
YAMAHA	XV PC Road Star Warrior	03- 07	1700	REAR
YAMAHA	XV A	11-	1900	REAR
YAMAHA	XV A Midnight Star	06- 10	1900	REAR

Tipo / *Type* : 3140

Marca / *Brand*	**Vehículo/ Modelo *Vehicle / Model***	**Año /*Year***	**Motor / *Engine***	**Eje / *Axle***
KYMCO	Xciting i	12-	400	REAR
KYMCO	Xciting	04-	500	REAR
KYMCO	Xciting i Evo ABS	11-	500	REAR
KYMCO	Xciting R ABS	09-	500	REAR
KYMCO	MyRoad, ABS	09-	700	REAR

Tipo / *Type* : 3141

Marca / *Brand*	**Vehículo/ Modelo *Vehicle / Model***	**Año /*Year***	**Motor / *Engine***	**Eje / *Axle***
APRILIA	AF1 Replica	90-	250	REAR
BENELLI	4T Turismo	78- 82	350	REAR
BENELLI		- 76	354	REAR
BENELLI	4T	75-	500	REAR
BENELLI	Sei	84-	750	FRONT
BENELLI	Sei		900	FRONT / REAR
BIMOTA	all models	82- 88	400-1000	FRONT / REAR
BIMOTA	SB3 D	83-	1000	FRONT / REAR
BMW	R65 GS	87- 92	650	FRONT
BMW	R65 GS	91- 92	650	FRONT
BMW	R65 LS	82- 85	650	FRONT
BMW	R65/1	86-	650	REAR
BMW	K75	90	750	FRONT / REAR
BMW	K75 C	85- 88	750	FRONT
BMW	K75 RT	91-	750	FRONT / REAR
BMW	K75 S, C	85- 95	750	FRONT / REAR
BMW	R80	85	800	FRONT
BMW	R80 G/S P.-D.	86	800	FRONT
BMW	R80 GS	81- 87	800	FRONT
BMW	R80 GS	91- 92	800	FRONT
BMW	R80 R	91-	800	REAR
BMW	R80 R	93-	800	FRONT
BMW	R80 RT	83	800	FRONT
BMW	R80/7	79- 81	800	REAR
BMW	K1	89	1000	REAR
BMW	K100 LT	87	1000	FRONT / REAR

BMW	K100 LT	92-	1000	REAR
BMW	K100 LT ABS	89	1000	FRONT / REAR
BMW	K100 RS	90-	1000	REAR
BMW	K100 RS ABS	88- 89	1000	FRONT / REAR
BMW	K100 RS, RT	83- 89	1000	FRONT / REAR
BMW	R100	81- 84	1000	FRONT / REAR
BMW	R100 CS,RS, RT	81- 84	1000	FRONT / REAR
BMW	R100 R	91- 95	1000	REAR
BMW	R100 RS	76- 80	1000	REAR
BMW	R100 RS	93-	1000	FRONT / REAR
BMW	R100 S	78- 80	1000	REAR
BMW	R100 T	79-	1000	REAR
BMW	K1100 LT/SE	92-	1100	REAR
BMW	K1100 RS	93-	1100	REAR
BMW	R1100 RS	93- 94	1100	REAR
BMW	K 1200 GT (K41) With	02- 05	1200	REAR
BMW	K 1200 RS	97- 05	1200	REAR
CZ	CZ	93-	180	FRONT
DUCATI	Desmo	- 77	250	FRONT
DUCATI	Desmo	- 77	350	FRONT
DUCATI	F3	86-	350	FRONT / REAR
DUCATI	Sport	77-	500	FRONT / REAR
DUCATI	Pantah SL	81- 83	600	FRONT / REAR
DUCATI	Pantah TL	82- 83	600	FRONT
DUCATI	Pantah	84-	650	FRONT / REAR
DUCATI	F1	86-	750	FRONT / REAR
DUCATI	GT	74- 76	750	FRONT
DUCATI	Paso	87	750	FRONT
DUCATI	Sport	90	750	FRONT / REAR

DUCATI	SS	74-	750	FRONT / REAR
DUCATI	SS	91-	750	REAR
DUCATI	Strada	91-	851	REAR
DUCATI	GT	75- 77	860	FRONT / REAR
DUCATI	Roche Replica	91-	888	REAR
DUCATI	GTS	77-	900	FRONT
DUCATI	S2 Desmo	85-	900	FRONT / REAR
DUCATI	Sport	77- 80	900	FRONT / REAR
DUCATI	SS	78- 89	900	FRONT / REAR
DUCATI	906 Paso	89	900	FRONT
DUCATI	6 Mike Halwood Replica	85-	1000	FRONT / REAR
DUCATI	S2 Desmo	85-	1000	FRONT / REAR
HOREX	Rebell T	86-	80	FRONT / REAR
HOREX	Sport L	86-	80	FRONT / REAR
HOREX	Imperator	96-	125	FRONT
HOREX	Regent	96-	125	FRONT
HOREX	E	86-	560	FRONT / REAR
HOREX	Columbus	87-	600	FRONT / REAR
INDIAN	Chief Blackhawk	11- 13	1700	REAR
INDIAN	Chief Bomber	10- 13	1700	REAR
INDIAN	Chief Classic	10- 13	1700	REAR
INDIAN	Chief Dark Horse	10- 13	1700	REAR
INDIAN	Chief Deluxe	09- 13	1700	REAR
INDIAN	Chief Roadmaster	09- 13	1700	REAR
INDIAN	Chief Standard	09- 13	1700	REAR
INDIAN	Chief Vintage	09- 13	1700	REAR
JAWA	CZ	92	180	FRONT
JAWA	Trail	93-	300	FRONT
LAVERDA	SFC		500	FRONT / REAR

LAVERDA	SFC	86-	600	FRONT / REAR
LAVERDA	V-Six	93-	650	FRONT / REAR
LAVERDA	SF2	74- 78	750	FRONT
LAVERDA	SF3	74- 78	750	FRONT
LAVERDA	SF3 RGS Corsa, Executive	77-	750	FRONT / REAR
LAVERDA	Jota	76-	1000	FRONT / REAR
LAVERDA	3C 3CE, 3CL	74-	1000	FRONT / REAR
LAVERDA	RGS	83-	1000	FRONT / REAR
LAVERDA	RGS Jota	86-	1000	FRONT / REAR
LAVERDA	SFC	85- 86	1000	FRONT / REAR
LAVERDA	TGA Executive	84-	1000	FRONT / REAR
LAVERDA	Mirage	78-	1200	FRONT / REAR
MOTO-GUZZI	NTX	90-	350	REAR
MOTO-GUZZI	V35 C	82- 87	350	FRONT
MOTO-GUZZI	V35 Florida	86- 92	350	FRONT
MOTO-GUZZI	V35 GT	90-	350	FRONT
MOTO-GUZZI	V35 III	87-	350	FRONT / REAR
MOTO-GUZZI	V35 TT	86-	350	FRONT / REAR
MOTO-GUZZI	NTX	90-	650	REAR
MOTO-GUZZI	V65 Florida	92- 94	650	FRONT / REAR
MOTO-GUZZI	V65 GT	90-	650	FRONT / REAR
MOTO-GUZZI	NTX	90-	750	REAR
MOTO-GUZZI	S3 Left	75- 76	750	FRONT
MOTO-GUZZI	S3 Right	75- 76	750	FRONT
MOTO-GUZZI	SP	91-	750	FRONT / REAR
MOTO-GUZZI	V75	86-	750	FRONT / REAR
MOTO-GUZZI	V75 Duna	86-	750	FRONT / REAR
MOTO-GUZZI	V75 TT Paris-Dakar	86-	750	FRONT / REAR
MOTO-GUZZI	Le Mans	76-	850	FRONT / REAR

MOTO-GUZZI	T	74- 76	850	FRONT
MOTO-GUZZI	T3	75-	850	FRONT / REAR
MOTO-GUZZI	T4	75-	850	FRONT / REAR
MOTO-GUZZI	T5	75-	850	FRONT / REAR
MOTO-GUZZI	T5 NT	86-	850	FRONT / REAR
MOTO-GUZZI	California II	85- 88	1000	FRONT / REAR
MOTO-GUZZI	California III C	91- 95	1000	FRONT / REAR
MOTO-GUZZI	California III, Fuel Injection	89	1000	FRONT / REAR
MOTO-GUZZI	Daytona	91-	1000	REAR
MOTO-GUZZI	Le Mans IV	85-	1000	FRONT / REAR
MOTO-GUZZI	Le Mans, V	90-	1000	FRONT / REAR
MOTO-GUZZI	GT V	91-	1000	FRONT / REAR
MOTO-GUZZI	S	90	1000	FRONT / REAR
MOTO-GUZZI	SP III	91-	1000	FRONT / REAR
MOTO-GUZZI	SP Le Mans Left/Rear	79-	1000	FRONT
MOTO-GUZZI	SP Le Mans Right	79-	1000	FRONT
MOTO-GUZZI	V Strada	93-	1000	FRONT
MOTO-GUZZI	California	96-	1100	FRONT / REAR
MV AGUSTA	all models	78-00	250-750	FRONT / REAR
MZ	Roadstar		125	FRONT
MZ	Sportstar	93-	125	FRONT
MZ	ETZ	82-	125	FRONT
MZ	ETZ	82-	150	FRONT
MZ	ETZ	82-	250	FRONT
MZ	(MUZ) Sportstar	96-	251	FRONT
MZ	Saxon Tour		251	FRONT
MZ	ETZ	89	251	FRONT
MZ	ETZ LUX	90	300	FRONT
MZ	ETZ X	88	300	FRONT

MZ	(MUZ) Sportstar	96-	301	FRONT
MZ	Saxon Tour		301	FRONT
MZ	ETZ	90-	301	FRONT
MZ	Saxon Country	92-	500	FRONT
MZ	Saxon Fun	92-	500	FRONT
MZ	Saxon Voyager		500	FRONT
MZ	Silver Star Classic	93-	500	FRONT
NORTON	Commander	90		FRONT / REAR
NORTON	Interpol	83-		FRONT / REAR
NORTON	Wankel Classic	88-	588	FRONT / REAR
NORTON	F-1	90	588	FRONT / REAR
OSSA	Yanqee	78	500	FRONT
SWM	XP Sahara		350	FRONT
TRIUMPH	Bonneville UK	87-	750	FRONT / REAR
ZUNDAPP	KS	78-	175	FRONT

Tipo / *Type* : 3142

Marca / *Brand*	**Vehículo/ Modelo *Vehicle / Model***	**Año /*Year***	**Motor / *Engine***	**Eje / *Axle***
APRILIA	RS-4	12-	50	FRONT
APRILIA	RS-4 Replica	16-	50	FRONT
APRILIA	Tuono ABS	17-	125	FRONT
APRILIA	RS-4	17-	125	FRONT
APRILIA	RS-4 GP	17-	125	FRONT
APRILIA	RS-4 (AJP cal.)	11-	125	FRONT
APRILIA	RS-4 Replica, ABS	16-	125	FRONT
BLATA	Enduro	07-	125	FRONT
BLATA	Motard	07-	125	FRONT
DERBI	DRD Pro corse	06-	50	FRONT

DERBI	GPX1	06-	50	FRONT
DERBI	GPR Cup	04-	80	FRONT
DERBI	GPR	05-	125	FRONT
DERBI	GPR Nude	05-	125	FRONT
DERBI	GPR Racing	09-	125	FRONT
GILERA	SC	06-	125	FRONT
MALAGUTI	NKD Dragon	06-	50	FRONT
MOTORHISPANIA	RX R	08-	50	FRONT
MOTORHISPANIA	MH7 Naked	08-	125	FRONT
MOTORHISPANIA	RX	08-	125	FRONT
PEUGEOT	XR 7	08-	50	FRONT
RIEJU	RS3 Pro	12-	50	FRONT
RIEJU	Tango	06-	125	FRONT
RIEJU	RS3	10-	125	FRONT
TOMOS	SM F (Rad.cal)	06-	125	FRONT

Tipo / *Type* : 3143

Marca / *Brand*	**Vehículo/ Modelo *Vehicle / Model***	**Año /*Year***	**Motor / *Engine***	**Eje / *Axle***
CAGIVA	Canyon 500	99-	500	FRONT
CAGIVA	Elefant 750	93- 95	750	FRONT
CAGIVA	Canyon I.E. 900	97-	900	FRONT
CAGIVA	Elefant I.E. 900	91- 92	900	FRONT
HONDA	CB TT	90	125	FRONT
HONDA	CB	88-	250	FRONT
HONDA	CD UJ	88- 92	250	FRONT
HONDA	NV Steed	88	400	FRONT
HONDA	NX Dominator (Austria)	88- 92	500	FRONT
HONDA	NX Dominator (Austria)	93- 96	500	FRONT

HONDA	NV C	88-	600	FRONT
HONDA	VT C, Shadow	88- 93	600	FRONT
HONDA	Steed	88- 91	600	FRONT
HONDA	NX Dominator J-K	88- 92	650	FRONT
HONDA	NX Dominator	93- 96	650	FRONT
HONDA	XRV Africa Twin	88- 89	650	FRONT
HONDA	VFR F, F2	86- 87	700	FRONT
HONDA	CBR Hurricane	87-	750	FRONT
HONDA	VFR F	86- 87	750	FRONT
HONDA	CBR F	87- 88	1000	FRONT
HONDA	GL A, SE, I Gold Wing	94-	1500	FRONT
HONDA	GL Gold Wing, Gold Wing SE	88-	1500	FRONT
HONDA	GLX	88-	1500	FRONT

Tipo / *Type* : 3145

Marca / *Brand*	**Vehículo/ Modelo *Vehicle / Model***	**Año /*Year***	**Motor / *Engine***	**Eje / *Axle***
APRILIA	RS	20-	660	FRONT
APRILIA	RS Tuono	20-	660	FRONT
APRILIA	RSV Tuono V4 R	14-	1000	FRONT
APRILIA	RSV Tuono V4	15-	1100	FRONT
APRILIA	RSV Tuono V4 Factory	16-	1100	FRONT
APRILIA	RSV Tuono V4 RR	15-	1100	FRONT
APRILIA	Caponord	13-	1200	FRONT
APRILIA	Caponord Rally	15-	1200	FRONT
BMW	F 800 R	15-	800	FRONT
BMW	F 900 R	20-	900	FRONT
BMW	F 900 XR	20-	900	FRONT
BMW	S 1000 XR	15-	1000	FRONT

BMW	R 1200 GS	13-	1200	FRONT
BMW	R 1200 GS Adventure	14-	1200	FRONT
BMW	R 1200 Nine-T	14-	1200	FRONT
BMW	R 1200 R	15-	1200	FRONT
BMW	R 1200 RS	15-	1200	FRONT
BMW	R 1200 RT	14-	1200	FRONT
BMW	R 1250 R	19-	1250	FRONT
BMW	R 1250 RS	19-	1250	FRONT
DUCATI	Monster 797	17-	803	FRONT
DUCATI	Hypermotard 821	13- 15	821	FRONT
DUCATI	Hypermotard ABS 821	13- 15	821	FRONT
DUCATI	Hypermotard SP 821	13- 15	821	FRONT
DUCATI	Hypermotard SP ABS 821	13- 15	821	FRONT
DUCATI	Hyperstrada 821	13- 15	821	FRONT
DUCATI	Hyperstrada ABS 821	13- 15	821	FRONT
DUCATI	Scrambler Classic 800	15-	800	FRONT
DUCATI	Scrambler Emdirp 800	15-	800	FRONT
DUCATI	Scrambler Mach 2.0 800	18-	800	FRONT
DUCATI	Scrambler Street Classic 800	17-	800	FRONT
DUCATI	Scrambler Track Pro 800	16-	800	FRONT
DUCATI	Scrambler Full Throttle 800	15-	800	FRONT
DUCATI	Scrambler Icon 800	15-	800	FRONT
DUCATI	Scrambler Urban Enduro 800	16-	800	FRONT
DUCATI	Scrambler-X Desert Sled 800	17-	800	FRONT
DUCATI	Monster 821	15-	821	FRONT
DUCATI	Monster Dark 821	15-	821	FRONT
DUCATI	Monster Stealth 821	19-	821	FRONT
DUCATI	Panigale 899	14- 15	899	FRONT
DUCATI	Hypermotard 939	16- 18	939	FRONT

DUCATI	Hypermotard SP 939	16- 18	939	FRONT
DUCATI	Hyperstrada 939	16-	939	FRONT
DUCATI	SuperSport 939	17-	939	FRONT
DUCATI	SuperSport S 939	17-	939	FRONT
DUCATI	Hypermotard 950	19-	950	FRONT
DUCATI	Hypermotard SP 950	19-	950	FRONT
DUCATI	Multistrada 950	17-	950	FRONT
DUCATI	Multistrada S 950	19-	950	FRONT
DUCATI	Panigale V2	20-	955	FRONT
DUCATI	Panigale 959	16- 19	959	FRONT
DUCATI	Panigale Corse 959	18-	959	FRONT
DUCATI	Scrambler 1100	18-	1100	FRONT
DUCATI	Scrambler Special 1100	18-	1100	FRONT
DUCATI	Scrambler Stport 1100	18-	1100	FRONT
DUCATI	Monster 1200	14- 16	1200	FRONT
DUCATI	Monster 1200	17-	1200	FRONT
DUCATI	Multistrada Enduro 1200	16-	1200	FRONT
DUCATI	Multistrada Enduro Pro 1200	18	1200	FRONT
DUCATI	Multistrada Enduro 1260	19-	1260	FRONT
FANTIC	Caballero	17-	500	FRONT
HARLEYD AVIDSON	LiveWire	19-	ELETRIC	FRONT
KAWASAKI	Z H2	20-	1000	FRONT
KYMCO	AK	17-	550	FRONT
INDIAN	FTR	19-	1200	FRONT
INDIAN	FTR S	19-	1200	FRONT
MV AGUSTA	Rivale 800	13-	800	FRONT
MV AGUSTA	Stradale 800	15-	800	FRONT
MV AGUSTA	Turismo Veloce 800	14-	800	FRONT
MV AGUSTA	Turismo Veloce Lusso 800	14-	800	FRONT

MV AGUSTA	Turismo Veloce RC 800	17-	800	FRONT
NORTON	Commando Cafe Racer MK II	18-	961	FRONT
NORTON	Commando Sport	18-	961	FRONT
NORTON	Dominator Naked	17-	961	FRONT
TRIUMPH	Street Triple R	17-	765	FRONT
TRIUMPH	Street Triple R Low	17-	765	FRONT
TRIUMPH	Tiger Explorer	16-	1200	FRONT
TRIUMPH	Tiger XCA	18-	1200	FRONT
TRIUMPH	Tiger XCX	18-	1200	FRONT
TRIUMPH	Tiger XR	18-	1200	FRONT
TRIUMPH	Tiger TRT	18-	1200	FRONT
TRIUMPH	Tiger XRX	18-	1200	FRONT
TRIUMPH	Tiger XRX Low	18-	1200	FRONT

Tipo / *Type* : 3146

Marca / *Brand*	**Vehículo/ Modelo *Vehicle / Model***	**Año /*Year***	**Motor / *Engine***	**Eje / *Axle***
MBK	YW 125 Z	10-	125	FRONT
YAMAHA	Xenter	12-	125	FRONT
YAMAHA	BWs 125	10-	125	FRONT
YAMAHA	YW 125 Z	10-	125	FRONT
YAMAHA	Xenter	12-	150	FRONT

Tipo / *Type* : 3147

Marca / *Brand*	**Vehículo/ Modelo *Vehicle / Model***	**Año /*Year***	**Motor / *Engine***	**Eje / *Axle***
HONDA	Monkey	19-	125	FRONT
HONDA	ANF i Innova	07- 11	125	FRONT
HONDA	ANF Innova	03- 06	125	FRONT

HONDA	CBF	09- 16	125	FRONT
HONDA	CBR R	03- 18	125	FRONT
HONDA	MSX	14-	125	FRONT
HONDA	CBR R	00-	150	FRONT
RIEJU	RS2 NKD	06-	50	FRONT
RIEJU	RS2 NKD	06-	125	FRONT

Tipo / *Type* : 3148

Marca / *Brand*	**Vehículo/ Modelo *Vehicle / Model***	**Año /*Year***	**Motor / *Engine***	**Eje / *Axle***
YAMAHA	TZR	93- 02	50	REAR
YAMAHA	Artesia	91-	400	FRONT
YAMAHA	XT E (Austria)	90- 96	500	FRONT
YAMAHA	XT E	90-	600	FRONT
YAMAHA	XT K	91-	600	FRONT
YAMAHA	XTZ Tenere	91- 98	660	FRONT

Tipo / *Type* : 3151

Marca / *Brand*	**Vehículo/ Modelo *Vehicle / Model***	**Año /*Year***	**Motor / *Engine***	**Eje / *Axle***
BENELLI	TNT	18-	125	REAR
BENELLI	TNT	18-	125	REAR
HONDA	CB 125 R	18-	125	REAR
HONDA	CBR 125 R	11- 18	125	REAR
HONDA	MSX 125	14-	125	REAR
HONDA	CRF 250 L	13- 15	250	REAR
HONDA	CRF 250 L ABS	17-	250	REAR
HONDA	CRF 250 M	14- 18	250	REAR
HONDA	CRF 250 Rally	17-	250	REAR

HONDA	CB 300 R	18-	300	REAR
HONDA	CB 300 R Neo Sports Cafe	19-	300	REAR
SUZUKI	GSX-R 125 RL	17-	125	REAR
SUZUKI	GSX-R 125 RLX	17-	125	REAR
SUZUKI	GSX-R 125 ML	17-	125	REAR
SUZUKI	GSX-R 125 MLX	17-	125	REAR

Tipo / *Type* : 3153

Marca / *Brand*	**Vehículo/ Modelo *Vehicle / Model***	**Año /*Year***	**Motor / *Engine***	**Eje / *Axle***
YAMAHA	NXC Cygnus	10-	125	FRONT

Tipo / *Type* : 3154

Marca / *Brand*	**Vehículo/ Modelo *Vehicle / Model***	**Año /*Year***	**Motor / *Engine***	**Eje / *Axle***
BMW	G 310 GS	17-	310	FRONT
BMW	G 310 R	16-	310	FRONT
BMW	C 400 X	18-	400	FRONT
BMW	C 400 GT	19-	400	FRONT
HUSQVARNA	Svartpilen	17-	401	FRONT
HUSQVARNA	Vitpilen	17-	401	FRONT
KTM	Duke	11-	125	FRONT
KTM	RC	14-	125	FRONT
KTM	Duke	12-	200	FRONT
KTM	RC	14-	200	FRONT
KTM	Adventure	20-	390	FRONT
KTM	Duke	13-	390	FRONT
KTM	RC	14-	390	FRONT

Tipo / *Type* : 3155

Marca / *Brand*	**Vehículo/ Modelo *Vehicle / Model***	**Año /*Year***	**Motor / *Engine***	**Eje / *Axle***
HONDA	CBR R (Nissin cal)	11- 13	250	REAR
HONDA	CBR R ABS (Nissin cal)	11- 13	250	REAR
HONDA	Rebel	17-	300	REAR
HONDA	CBR F	14-	300	REAR
HONDA	CBR R	15-	300	REAR
HONDA	Rebel	17-	500	REAR
HONDA	CB F	13-	500	REAR
HONDA	CB X	13-	500	REAR
HONDA	CBR R	13-	500	REAR
HONDA	CB F	14-	650	REAR
HONDA	CB R Neo Sports Cafe	19-	650	REAR
HONDA	CBR F	14-	650	REAR
HONDA	CBR F ABS	14-	650	REAR
HONDA	CBR R	19-	650	REAR
HONDA	CTX	14-	700	REAR
HONDA	CTX D ABS w/DCT	14-	700	REAR
HONDA	CTX N	14-	700	REAR
HONDA	CTX ND ABS w/DCT	14-	700	REAR
HONDA	A-ADV	17-	750	REAR
HONDA	NC D Integra	14-	750	REAR
HONDA	NC S w/DCT	14-	750	REAR
HONDA	NC X w/DCT	14-	750	REAR
HONDA	NM4 Vultus ABS w/DCT	15-	750	REAR
KAWASAKI	KLE Versys	15-	650	REAR
KAWASAKI	KLE Versys LT	15-	650	REAR
KAWASAKI	Z 750 R	11- 12	750	REAR

KAWASAKI	Z 800	13- 16	800	REAR
KAWASAKI	Z 800 ABS	13- 16	800	REAR
KAWASAKI	Z 800 e	13-	800	REAR
KAWASAKI	Z 800 e ABS	13- 16	800	REAR
KAWASAKI	Z 900	17-	900	REAR
SUZUKI	GW Inazuma	12-	250	REAR
SUZUKI	GW Inazuma F	15-	250	REAR
SUZUKI	SFV Gladius Left/Rear	09-	650	REAR
SUZUKI	SV Left/Rear	16-	650	REAR
SUZUKI	SV X Left/Rear	16-	650	REAR

Tipo / *Type* : 3162

Marca / *Brand*	**Vehículo/ Modelo *Vehicle / Model***	**Año /*Year***	**Motor / *Engine***	**Eje / *Axle***
AJP	PR3 Enduro	13-	125	FRONT
AJP	PR3 Enduro Pro	13-	125	FRONT
AJP	PR3 Extreme	13-	125	FRONT
AJP	PR3 Supermoto	13-	125	FRONT
AJP	PR4 Enduro	13-	125	FRONT
AJP	PR4 Enduro Pro	13-	125	FRONT
AJP	PR4 Supermoto	13-	125	FRONT
AJP	PR4 Trail	13-	125	FRONT
AJP	PR3 MX	13-	240	FRONT
AJP	PR5 Enduro	10-	250	FRONT
AJP	PR5 Extreme	12-	250	FRONT
AJP	PR5 Supermoto	10-	250	FRONT
AJP	PR7 Adventure	17-	650	FRONT
DERBI	Mulhacen	08-	125	FRONT
DERBI	Terra	08-	125	FRONT

DERBI	Terra Adventure	08-	125	FRONT
HONDA	CRE 125 RR	11-	125	FRONT
HONDA	CRF 250 L	13-	250	FRONT
HONDA	CRF 250 L ABS	17-	250	FRONT
HONDA	CRF 250 M	14-	250	FRONT
HONDA	CRF 250 Rally	17-	250	FRONT
PIAGGIO	Liberty iGet 4T 3V	17-	125	FRONT
PIAGGIO	Medley	16-	125	FRONT
PIAGGIO	Medley S	17-	125	FRONT
PIAGGIO	New Liberty	16-	125	FRONT
PIAGGIO	Medley	16-	150	FRONT
SCORPA	T-Ride	08-	250	FRONT

Tipo / *Type* : 3167

Marca / *Brand*	**Vehículo/ Modelo *Vehicle / Model***	**Año /*Year***	**Motor / *Engine***	**Eje / *Axle***
HARLEY DAVIDSON	XL 883 C Sportster Custom	04- 13	883	REAR
HARLEY DAVIDSON	XL 883 L Sportster Low	06- 13	883	REAR
HARLEY DAVIDSON	XL 883 L Super Low	11- 13	883	REAR
HARLEY DAVIDSON	XL 883 N Iron	13	883	REAR
HARLEY DAVIDSON	XL 883 R Roadster	10- 13	883	REAR
HARLEY DAVIDSON	XL 883 Sportster	04- 13	883	REAR
HARLEY DAVIDSON	XL 883 Sportster R	05- 13	883	REAR
HARLEY DAVIDSON	XL 1200 C Sportster Custom	04-	1200	REAR
HARLEY DAVIDSON	XL 1200 L Sportster Low	07-	1200	REAR
HARLEY DAVIDSON	XL 1200 N Nightster	07-	1200	REAR
HARLEY DAVIDSON	XL 1200 R Sportster Roadster	04-	1200	REAR
HARLEY DAVIDSON	XL 1200 V Seventy-Two	11- 16	1200	REAR
HARLEY DAVIDSON	XL 1200 X Forty-Eight	16	1200	REAR

HARLEY DAVIDSON	XR 1200	08-	1200	REAR
HARLEY DAVIDSON	XR 1200 X	10-	1200	REAR

Tipo / *Type* : 3174

Marca / *Brand*	**Vehículo/ Modelo *Vehicle / Model***	**Año /*Year***	**Motor / *Engine***	**Eje / *Axle***
SYM	SN Ni Wolf	14-	250	FRONT
SYM	SN T2 Wolf	12-	250	FRONT
SYM	Cruisym	17-	300	FRONT
SYM	Wolf Cafe Racer	15-	300	FRONT
SYM	Wolf Classic	15-	300	FRONT
SYM	SB Cafe Racer	16-	300	FRONT
SYM	i Maxsym	12-	400	FRONT
SYM	i Maxsym	14-	600	FRONT
SYM	i Maxsym Sport	18-	600	FRONT

Tipo / *Type* : 3175

Marca / *Brand*	**Vehículo/ Modelo *Vehicle / Model***	**Año /*Year***	**Motor / *Engine***	**Eje / *Axle***
YAMAHA	YP RA X-Max ABS	17-	125	FRONT
YAMAHA	MT-25	16-	250	FRONT
YAMAHA	YZF R25	15-	250	FRONT
YAMAHA	YP X-Max	17-	300	FRONT
YAMAHA	MT-03	16-	321	FRONT
YAMAHA	YZF R3	15-	321	FRONT

Tipo / *Type* : 3176

Marca / *Brand*	**Vehículo/ Modelo *Vehicle / Model***	**Año /*Year***	**Motor / *Engine***	**Eje / *Axle***
HONDA	CB 125 R	18-	125	FRONT
HONDA	CB 300 R	18-	300	FRONT
HONDA	CB 300 R Neo Sports Cafe	18-	300	FRONT
HONDA	CB 650 R Neo Sports Cafe	19-	650	FRONT
HONDA	CBR 650 R	19-	650	FRONT
HONDA	X-ADV	17-	750	FRONT
HONDA	CRF 1000 L Africa Twin	16-	1000	FRONT
HONDA	CRF 1000 L Africa Twin	18-	1000	FRONT
HONDA	CRF 1100 L Africa Twin	20-	1100	FRONT

Tipo / *Type* : 3184

Marca / *Brand*	**Vehículo/ Modelo *Vehicle / Model***	**Año /*Year***	**Motor / *Engine***	**Eje / *Axle***
KYMCO	AK 550	17-	550	REAR

Tipo / *Type* : 3185

Marca / *Brand*	**Vehículo/ Modelo *Vehicle / Model***	**Año /*Year***	**Motor / *Engine***	**Eje / *Axle***
HONDA	CB T, Superdream	82-	125	FRONT
HONDA	CBX F	84- 88	125	FRONT
HONDA	CN	93-	250	FRONT
HONDA	CN Helix (Fusion)	92	250	FRONT
HONDA	CBX S	88-	250	FRONT
HONDA	CN Scooter	88- 92	250	FRONT
HONDA	CN Spazio	88- 92	250	FRONT
HONDA	NS R	85	250	FRONT

HONDA	CM C	81	400	FRONT
HONDA	NS R	85- 87	400	FRONT
HONDA	VF Integra	86-	400	FRONT / REAR
HONDA	CB SC Nighthawk	83- 86	450	FRONT
HONDA	CX	81-	500	FRONT
HONDA	CX Euro	82-	500	FRONT / REAR
HONDA	CX Turbo	82- 83	500	REAR
HONDA	GL	82	500	FRONT
HONDA	GL I	81- 82	500	FRONT
HONDA	CX E	83-	650	FRONT
HONDA	VF C Magna	85- 86	700	FRONT
HONDA	VF F Interceptor	84- 85	700	FRONT
HONDA	CB SC	82- 83	750	FRONT
HONDA	XLV R	86- 88	750	FRONT
HONDA	CB F, F2	81- 84	900	FRONT
HONDA	CBX	81- 82	1000	FRONT
HONDA	GL Gold Wing	82- 83	1100	FRONT
HONDA	VF C	83- 86	1100	FRONT
HONDA	VF S	84- 85	1100	FRONT
HONDA	GL A, I Gold Wing	84- 86	1200	FRONT
HONDA	GL DX Gold Wing	86-	1200	FRONT
HONDA	GL Gold Wing	84- 86	1200	FRONT
XINGFU	XF A	97-	150	FRONT

Tipo / *Type* : 3186

Marca / *Brand*	**Vehículo/ Modelo *Vehicle / Model***	**Año /*Year***	**Motor / *Engine***	**Eje / *Axle***
HONDA	CB TDC	83- 89	125	FRONT
HONDA	CBX RSE	84-	250	FRONT
HONDA	CN Helix	86- 87	250	FRONT
HONDA	GB Clubman	88-	250	FRONT
HONDA	NS R	85	250	REAR
HONDA	NSR R	87-	250	REAR
HONDA	Xelvis		400	FRONT / REAR
HONDA	CB	81-	400	FRONT / REAR
HONDA	CB Four	81-	400	FRONT
HONDA	CB Hawk	81-	400	FRONT / REAR
HONDA	CB N	82-	400	FRONT
HONDA	CB Twin	82-	400	FRONT
HONDA	CBR F, FII	85	400	FRONT / REAR
HONDA	CBR R	87	400	REAR
HONDA	CM T	82-	400	FRONT
HONDA	GB T.T.	88-	400	FRONT
HONDA	NS R	85- 87	400	REAR
HONDA	NV Custom	88	400	REAR
HONDA	CB T	82-	450	FRONT
HONDA	CM A, C	82-	450	FRONT
HONDA	CMX Rebel	86- 88	450	FRONT
HONDA	CBR F (Austria)	87- 90	500	REAR
HONDA	CX C	81- 82	500	FRONT
HONDA	CX Silver W., Turbo	83-	500	FRONT / REAR
HONDA	CX Turbo	82- 83	500	FRONT
HONDA	FT	82-	500	FRONT / REAR

HONDA	GB T.T.	88-	500	FRONT
HONDA	GL	82	500	REAR
HONDA	GL D	81- 82	500	FRONT
HONDA	NS R	85-	500	FRONT / REAR
HONDA	VF F, FII	84- 86	500	FRONT / REAR
HONDA	VT C Shadow	83- 86	500	FRONT
HONDA	XBR S	85- 89	500	FRONT
HONDA	CB SC	83-	550	FRONT
HONDA	CBR F Hurricane	87- 90	600	REAR
HONDA	CBX E	85-	600	FRONT
HONDA	XL LM, RM	85-	600	FRONT
HONDA	XL V, Transalp	87- 90	600	FRONT
HONDA	CB	85-	650	FRONT
HONDA	CB SC Nighthawk	83- 85	650	FRONT
HONDA	CBX ED, SC, SCD	83-	650	FRONT
HONDA	CX C	83-	650	FRONT
HONDA	CX E	83-	650	REAR
HONDA	CX Turbo	83-	650	FRONT / REAR
HONDA	GL D	83- 84	650	FRONT
HONDA	CB SC	84- 86	700	FRONT
HONDA	VF C Magna	84	700	FRONT
HONDA	VF C Magna	87	700	FRONT
HONDA	VF F Interceptor	84- 85	700	REAR
HONDA	VF S	84- 85	700	FRONT
HONDA	VFR F, F2	86- 87	700	REAR
HONDA	VT C, Shadow	87	700	FRONT
HONDA	CB C	82-	750	FRONT
HONDA	CB C, F, FII, K	85-	750	FRONT
HONDA	CB F	81- 82	750	FRONT / REAR

HONDA	CB K	81-	750	FRONT / REAR
HONDA	CB KZ	82-	750	FRONT
HONDA	CBR Hurricane	87-	750	REAR
HONDA	CBX	84- 88	750	FRONT / REAR
HONDA	CBX F	84- 88	750	FRONT / REAR
HONDA	NV CG Shadow	86-	750	FRONT
HONDA	VF C	82-	750	FRONT
HONDA	VF C, Magna	88- 93	750	FRONT
HONDA	VF F	83- 84	750	FRONT / REAR
HONDA	VF S	85	750	FRONT
HONDA	VF Sport	82- 83	750	FRONT
HONDA	VFR F	86- 87	750	REAR
HONDA	VP CH, Custom	87-	750	FRONT
HONDA	VT C, Shadow	86-	750	FRONT
HONDA	XLV R	83- 85	750	FRONT
HONDA	VT C	88-	800	FRONT
HONDA	CB C	82-	900	FRONT / REAR
HONDA	CB F, F2	81- 84	900	REAR
HONDA	CB C	83-	1000	FRONT / REAR
HONDA	CBR F	87- 88	1000	REAR
HONDA	CBX	81- 82	1000	REAR
HONDA	VF F, FII	84- 86	1000	FRONT / REAR
HONDA	VF FII Bol d'Or	85	1000	FRONT / REAR
HONDA	VF R	84- 87	1000	FRONT
HONDA	VF R	86-	1000	FRONT / REAR
HONDA	VT C	88-	1000	FRONT
HONDA	CB F	83-	1100	FRONT / REAR
HONDA	CB R	81- 83	1100	FRONT / REAR
HONDA	CB RD	83-	1100	FRONT / REAR

HONDA	GL DLX Gold Wing	81-	1100	FRONT / REAR
HONDA	GL Gold Wing	82- 83	1100	REAR
HONDA	VF C	83- 86	1100	REAR
HONDA	VF S	84- 85	1100	REAR
HONDA	VT C Shadow	87- 93	1100	FRONT
HONDA	GL A, I Gold Wing	84- 86	1200	REAR
HONDA	GL DX Gold Wing	86-	1200	REAR
HONDA	GL Gold Wing	84- 86	1200	REAR
HONDA	GL A, SE, I Gold Wing	94-	1500	REAR
HONDA	GL Gold Wing, Gold Wing SE	88-	1500	REAR
HONDA	GLX	88-	1500	REAR
SYM	110	93	110	FRONT
SYM	125	93	125	FRONT

Tipo / *Type* : 3188

Marca / *Brand*	**Vehículo/ Modelo *Vehicle / Model***	**Año /*Year***	**Motor / *Engine***	**Eje / *Axle***
SYM	i Maxsym	11-	400	REAR
SYM	i Maxsym	14-	600	REAR
SYM	i Maxsym Sport	18-	600	REAR

Tipo / *Type* : 3190

Marca / *Brand*	**Vehículo/ Modelo *Vehicle / Model***	**Año /*Year***	**Motor / *Engine***	**Eje / *Axle***
BENELLI	TNT	17-	125	FRONT
HONDA	MBX	86-	80	FRONT
HONDA	MTX R	87-	80	FRONT
HONDA	Lead	00-	100	FRONT
HONDA	NHX	10-	110	FRONT
HONDA	CR RE, RF	84- 85	125	FRONT
HONDA	CR RG	86	125	FRONT
HONDA	MTX R	84- 95	125	FRONT
HONDA	NES @	01- 06	125	FRONT
HONDA	NSR F	88- 89	125	FRONT
HONDA	XL R	86	125	FRONT
HONDA	NES @	01- 06	150	FRONT
HONDA	MTX R	85-	200	FRONT
HONDA	ATC R	85- 86	250	FRONT / REAR
HONDA	ATC X	85	250	FRONT
HONDA	CB RS	85-	250	FRONT
HONDA	CH Spacy	85- 86	250	FRONT
HONDA	CH Spacy,Freeway Fusion	88-	250	FRONT
HONDA	CN Spazio	88- 89	250	FRONT
HONDA	CR RE, RF	84- 85	250	FRONT
HONDA	CR RG	86	250	FRONT
HONDA	FTR	86-	250	FRONT / REAR
HONDA	TRX R	86- 89	250	REAR
HONDA	TRX X Fourtrax	87	250	REAR
HONDA	XL R	84- 87	250	FRONT
HONDA	XLR R	88-	250	FRONT

HONDA	XR R	84- 87	250	FRONT
HONDA	ATC X	85	350	FRONT
HONDA	XL R	84-	350	FRONT
HONDA	XR R	84- 85	350	FRONT
HONDA	CR RE, RF	84- 85	500	FRONT
HONDA	CR RG	86	500	FRONT
HONDA	XL R	83-	500	FRONT
HONDA	XR R	86-	500	FRONT
HONDA	XR R, Pro Link	83- 84	500	FRONT
HONDA	XL R	83- 87	600	FRONT
HONDA	XLM LM	87-	600	FRONT
HONDA	XR R	83- 87	600	FRONT

Tipo / *Type* : 3196

Marca / *Brand*	**Vehículo/ Modelo *Vehicle / Model***	**Año /*Year***	**Motor / *Engine***	**Eje / *Axle***
HONDA	Monkey	19-	125	REAR
YAMAHA	MW Tricity Left/Rear	14-	125	REAR

Tipo / *Type* : 3201

Marca / *Brand*	**Vehículo/ Modelo *Vehicle / Model***	**Año /*Year***	**Motor / *Engine***	**Eje / *Axle***
SUZUKI	GSX-R RL	17-	125	FRONT
SUZUKI	GSX-R RLX	17-	125	FRONT
SUZUKI	GSX-R ML	17-	125	FRONT
SUZUKI	GSX-R MLX	17-	250	FRONT

Tipo / *Type* : 3204

Marca / *Brand*	**Vehículo/ Modelo *Vehicle / Model***	**Año /*Year***	**Motor / *Engine***	**Eje / *Axle***
HONDA	CBR 250 F	86	250	FRONT
HONDA	CBR 250 Hurricane	87	250	FRONT
HONDA	NSR 250 R	87	250	FRONT
HONDA	VT 250 F	88- 90	250	FRONT
HONDA	VTR 250	90	250	FRONT
HONDA	VTZ 250	88- 99	250	FRONT
HONDA	CB 350 S.G. (U.K. Only)	87- 90	350	FRONT
HONDA	NX 350	88- 99	350	FRONT
HONDA	CB 400 N	86	400	FRONT
HONDA	CBR 400 F	92- 96	400	FRONT
HONDA	CBR 400 R	87	400	FRONT
HONDA	VFR 400 R	86- 87	400	FRONT / REAR
HONDA	VFR 400 R	87- 88	400	FRONT
HONDA	CB 450 S	86- 88	450	FRONT
HONDA	CBR 500 F (Austria)	87- 90	500	FRONT
HONDA	CBR 600 F Hurricane	87- 90	600	FRONT
HONDA	CBR 600 F, Super Sport	91- 94	600	FRONT
HONDA	NTV 600 Revere	88- 92	600	FRONT
HONDA	XRV 750 Africa Twin	90- 92	750	FRONT

Anexo / *Annex* 6: Instrucciones de montaje / *Fitting Instructions*

Tipo / *Type* : 3059

STEP ONE: *Have the following parts available before you start the brake change: 1) Power Stop brake pads such as the Evolution ceramic pads, 2) Power Stop cross-drilled or slotted rotors, 3) a bottle of DOT 3 or 4 brake fluid as recommended by your owner's manual, 4) brake pad grease 5) a c-clamp. You should also have a car jack and jack stands.*

STEP TWO: *Block the rear wheels so the car won't roll once you jack it up. Put the car in park and set the parking brake firmly.*

STEP THREE: *Before jacking the car up off the ground, loosen the lug nuts on the wheels just enough to break them free. Work them off just enough until they loosen their resistance and become easy to turn with the tire iron. Raise the car and support with safe jack stands under flat spots on the frame. Usually the frame support area is immediately to the rear of the front wheels.*
CAUTION: *Always use jack stands. Never attempt to work on an elevated vehicle held in place only by a hydraulic jack.*

STEP FOUR: *Remove the lug nuts and the wheel. It is best to work on one wheel at a time, leaving the other side intact as a point of reference. As a safety precaution, roll the wheel/tire assembly under the front-center of the car, between the jack stands, and set it down beneath the engine's K-member. In the event of a faulty jack stand.*

STEP FIVE: *Review the brake components. A disc brake assembly is composed of . a caliper, two brake pads, and a rotor. The caliper works on pressurized brake fluid through a piston in the caliper. The caliper has a fixed part bolted to the spindle knuckle and a slide part that holds the brake pads. The caliper is mounted with two bolts. These bolts usually have dust boots. When the brakes are applied, the caliper piston squeezes the pads against the rotor creating friction.*
NOTE: *If you are not replacing or turning down the rotor, then install 2 lug nuts backwards to hold the rotor in place when removing the caliper (fig. 2).*

…

We can create fitting instructions, but in our point of view it is essential that the brakes are replaced exclusively by authorized mechanics.
Inserting instructions seems to allow anyone to do this operation that may involve safety risks for the user and for the users of the road.
Please let us know if it is important to create fitting instructions for certification purposes:

• CHECK THAT THE PADS KIT IS SUITABLE FOR THE REPLACEMENT AND RETURNS TO THE LIST OF VEHICLES FOR WHICH IT HAS BEEN APPROVED
• WHEN PRESENT REMOVE THE PINS OR SPRINGS THAT KEEP THE PADS
• DISASSEMBLE THE BRAKE CALIPER AND ENLARGE THE PISTONS BY USING THE OLD PADS TO MAKE A LEVER WITH A CLAMP OR SCREWDRIVER UNTIL THE PISTONS ARE COMPLETELY BACK INTO THE CALIPER
• CLEAN THE CALIPER BY IMPURITY OR DIRT WITH A DRIED CLOTH
• DO NOT ABSOLUTELY USE ANY OILS OR GREASE THAT MAY GO IN CONTACT WITH THE DISC OR FRICTION MATERIAL: THIS WOULD AFFECT THE CORRECT PRODUCT PERFORMANCE
• FIT THE NEW PADS INSIDE THE CALIPER WITH THE FRICTION MATERIAL TOWARDS THE BRAKE DISC AND THE BACKING PLATE TOWARDS THE PISTON
• REFIT THE CALIPER ON ITS SUPPORT
• ACTIVATE THE BRAKE LEVER UNTIL TAKING INTO CONTACT PADS AND DISC
• TRAVEL ABOUT 10 KM OF BREAK-IN WITHOUT EVER USING THE BRAKE UNDER STRESS, MAKE BRAKES BUT NEVER BRUSCHES OR AT HIGH SPEED

IDIADA CV20021440

Anexo / *Annex* 7: Empaquetado y marcado / *Packaging and marking*

Tipo / *Type* : from 3059

Example:

IDIADA CV20021440